B.E.G. LUXOMAT® net

KNX Generation 7

Presence Detectors KNX TP / KNX RF (radio)

Application description

valid for all B.E.G. occupancy detectors with KNXs in the type designation.

Aleum Glow	PD4N	PD5N	PICO	RC-plus	Indoor 180
PD2N	PD4-GH	PD9	PD11	next N	Indoor 140

Subject to technical changes.

All device data can also be found here:

https://www.beg-luxomat.com/en-in/products/control-systems/knx/?systemgeraetetyp=control-device-sensor

© 2026

B.E.G. Brück Electronic GmbH
Gerberstraße 33
51789 Lindlar
GERMANY

Phone: **+49 (0) 2266 90121-0**
Fax: **+49 (0) 2266 90121-50**

E-mail: **support@beg.de**
Internet: **beg-luxomat.com**

Content

1 Overview . . . 7
1.1 Related documents . . . 8
2 General . . . 9
2.1 Basic information about the KNX bus . . . 9
2.2 Symbolism . . . 9
2.3 KNX Data Secure . . . 9
2.3.1 Commissioning Data Secure . . . 9
2.3.2 FDSK . . . 10
2.3.3 Master reset . . . 10
2.4 System description KNX RF devices . . . 10
3 Basics of motion detection . . . 11
3.1 Introduction . . . 11
3.2 Motion detection of the B.E.G. KNX detectors . . . 11
3.3 Function of the device . . . 11
3.3.1 Motion-dependent operation (occupancy detector) . . . 11
3.3.2 Motion-independent operation (twilight detector) . . . 11
3.4 Light evaluation . . . 12
3.5 Switching and regulation operation . . . 12
3.6 Function blocks of the detector . . . 13
4 General structure of the application . . . 15
4.1 Detector configuration . . . 15
4.2 Light measurement configuration . . . 15
4.3 Button configuration . . . 15
4.4 Further configuration . . . 15
5 Cards and parameters . . . 17
5.1 Detector configuration - Settings . . . 17
5.1.1 Light output (LO) . . . 17
5.1.2 Operation mode . . . 17
5.1.3 HVAC outputs . . . 18
5.1.4 Slave (SL) . . . 18
5.2 Light measurement Configuration . . . 19
5.2.1 Weighted measurement . . . 20
5.2.2 Smallest measured light value . . . 20
5.2.3 Adjusting the measured value using the BLE/IR adapter (art. no. 93067) . . . 22
5.2.4 Adjustment of the measured value using external values . . . 23
5.2.5 Send brightness value . . . 25
5.3 Button configuration . . . 26
5.3.1 Debounce time in ms (PBx/IRx: configuration) . . . 27
5.3.2 Operation mode (PBx/IRx: configuration) . . . 27
5.3.2.1 Further parameters for operation mode “Switching” . . . 27
5.3.2.2 Further parameters for operating mode “Dimming” . . . 29
5.3.2.3 Further parameters for operating mode: “Blinds / Shutters” . . . 31
5.3.2.4 Further parameters for operating mode “Scene” . . . 34
5.4 Further configuration . . . 35

5.4.1 HCL . . . 35
5.4.1.1 Building type (HCL: Configuration) . . . 35
5.4.1.2 Automatic adjustment (HCL: configuration) . . . 36
5.4.1.3 Settings (HCL: Configuration) . . . 38
5.4.1.4 Scene function (HCL: configuration) . . . 39
5.4.1.5 Locking function (HCL: configuration) . . . 39
5.4.2 Logic . . . 40
5.4.2.1 Settings (L(x): Logic Configuration) . . . 40
5.4.2.2 Input 1-3 (L(x): Logic configuration) . . . 40
5.4.2.3 Output (L(x): Logic configuration) . . . 42
5.4.3 Simulation . . . 43
5.4.3.1 Settings (SIMU: Configuration) . . . 43
5.4.4 Temperature measurement . . . 44
5.4.5 Remote control . . . 45
5.4.5.1 Overview of remote-control functions . . . 46
5.4.5.2 Remote control (27 buttons) for configuration (art. no. 92123) . . . 47
5.4.5.3 Remote control (5 buttons) for end customers (art. no. 93398) . . . 47
5.4.5.4 B.E.G. One App . . . 47
5.4.5.5 Parameters . . . 53
5.4.6 Sound sensor . . . 54
5.4.7 Motion/IR LED . . . 55
5.4.8 Test mode . . . 56
5.4.9 Ambient light . . . 56
5.4.10 Start delay . . . 56
5.4.11 Telegram repetitions . . . 57
5.4.12 Retransmitter function (repeater function) . . . 57
5.5 LO: Detector configuration . . . 58
5.5.1 Card “motion-dependent switching mode” or “motion-dependent regulation mode” . . . 58
5.5.1.1 Operation mode of the detector . . . 58
5.5.1.2 External influences . . . 59
5.5.1.3 Manual switch-on with sufficient ambient light . . . 60
5.5.1.4 State or function after manual switch-off or end of follow-up time . . . 60
5.5.1.4.1 Switch-off pre-warning (switching mode) . . . 61
5.5.1.4.2 Switch-off pre-warning (regulation mode) . . . 61
5.5.1.4.3 Projector/Corridor (Manual Off) . . . 61
5.5.1.5 Orientation light . . . 62
5.5.1.5.1 Orientation light (switching mode) . . . 63
5.5.1.5.1.1 Brightness of the LEDs in per cent . . . 63
5.5.1.5.1.2 Motion detection . . . 63
5.5.1.5.1.3 Orientation light function . . . 64
5.5.1.5.2 Orientation light (regulation mode) . . . 64
5.5.1.5.2.1 Motion detection . . . 65
5.5.1.5.2.2 Orientation light function . . . 65
5.5.1.6 Night light . . . 66
5.5.1.6.1 Night light (switching mode) . . . 66
5.5.1.6.1.1 Brightness night light of the LEDs in percent . . . 66
5.5.1.6.1.2 Night light function . . . 67

5.5.1.6.2 Night light (regulation mode) . . . 67
5.5.1.6.2.1 Night light function . . . 68
5.5.1.7 Orientation light and night light after manual switch-off . . . 68
5.5.1.8 Orientation light and night light global control of the slave LEDs . . . 69
5.5.1.9 Colour of the orientation and night light LED . . . 69
5.5.1.10 Central OFF . . . 70
5.5.1.11 Lock . . . 70
5.5.1.11.1 Behaviour upon activation of lock . . . 71
5.5.1.11.2 Behaviour upon deactivation of lock . . . 71
5.5.1.11.3 Apply time limit to lock . . . 72
5.5.1.11.4 Upon bus voltage return . . . 72
5.5.1.11.5 Lock modifiable . . . 72
5.5.1.11.6 Lock with . . . 72
5.5.1.11.7 Cycle time during lock . . . 73
5.5.1.12 Behaviour upon bus voltage return . . . 73
5.5.1.13 Burn-in function . . . 73
5.5.1.14 Additional settings motion sensor(s) . . . 74
5.5.1.14.1 Safety delay . . . 75
5.5.1.14.2 Same settings for all sensors (direction detection) . . . 75
5.5.1.14.3 Sensitivity of sensors . . . 76
5.5.1.14.4 Sensitivity changeable . . . 76
5.5.1.15 Sound sensor . . . 78
5.5.1.16 Adjustment of the dimming curve . . . 80
5.5.2 Follow-up time (card) . . . 81
5.5.2.1 Follow-up time (parameter) . . . 81
5.5.2.2 Overwrite follow-up time . . . 81
5.5.2.3 Triggering . . . 82
5.5.2.4 Waiting period after switch-off in semi-automatic mode . . . 82
5.5.2.5 Setting the follow-up time of the sensors individually (direction detection) . . . 83
5.5.2.6 Short Presence . . . 84
5.5.2.7 Self-adjustment of the follow-up time . . . 84
5.5.3 Switch-on threshold / Set values Brightness . . . 85
5.5.3.1 Switch-on threshold (card) . . . 85
5.5.3.1.1 Switching depending on brightness . . . 85
5.5.3.1.2 Switch-on threshold in lux . . . 85
5.5.3.1.3 Overwrite switch-on threshold . . . 85
5.5.3.1.4 Additional threshold . . . 85
5.5.3.1.5 Calculation of the switch-off threshold . . . 86
5.5.3.1.6 Hysteresis of the switch-off threshold . . . 86
5.5.3.1.7 Daylight-dependent switch-off delay . . . 86
5.5.3.1.8 Waiting period after daylight-dependent switch-off in semi-automatic mode 86
5.5.3.2 Brightness set values (card) . . . 87
5.5.3.2.1 Set value Brightness . . . 87
5.5.3.2.2 Set value Brightness overwritable . . . 87
5.5.3.2.3 Additional set value / fixed value . . . 87
5.5.3.2.4 Fixed value at start/stop in %. . . . 88
5.5.3.2.5 Send colour value . . . 88

5.5.4 Switching output / Controller configuration . . . 89
5.5.4.1 Switching output (card) . . . 89
5.5.4.1.1 Detector sends . . . 89
5.5.4.1.1.1 Detector sends ➜ Switching object . . . 90
5.5.4.1.1.2 Detector sends ➜ Value object . . . 90
5.5.4.1.1.3 Detector sends ➜ Switching and value object . . . 91
5.5.4.1.1.4 Detector sends ➜ Scene number . . . 91
5.5.4.1.2 Cycle time in seconds . . . 91
5.5.4.2 Controller configuration (card) . . . 91
5.5.4.2.1 Starting behaviour . . . 91
5.5.4.2.1.1 Softstart . . . 92
5.5.4.2.1.1.1 Relative dimming . . . 92
5.5.4.2.1.1.2 Jump to a fixed value . . . 92
5.5.4.2.1.1.3 Jump to a calculated value . . . 93
5.5.4.2.1.1.4 Preset / User Mode (Last Level) . . . 93
5.5.4.2.1.2 Learning time after starting . . . 94
5.5.4.2.1.3 Hysteresis . . . 94
5.5.4.2.1.4 Minimum regulation time, Acceleration of regulation, if dark, Maximum regulation step . . . 95
5.5.4.2.1.5 Regulation minimum . . . 95
5.5.4.2.1.6 Switch-off delay at regulation minimum . . . 95
5.5.4.2.1.7 Waiting time after switching off at control minimum in semi-automatic mode . . . 96
5.5.4.2.1.8 Offset between regulation value and group x . . . 96
5.5.4.2.1.9 Cycle time . . . 98
5.6 HVACx: Detector configuration . . . 98
5.6.1 Switching output ➜ Detector sends . . . 98
5.6.1.1 Switching object . . . 98
5.6.1.2 Value object . . . 99
5.6.1.3 HVAC Mode . . . 99
5.6.2 Switching output ➜ Send colour value . . . 100
5.7 SL: Slave configuration . . . 100
5.7.1 Settings ➜ Locking Time/Reset . . . 100
6 List of data point types . . . 102
7 Diagnosis / Troubleshooting . . . 108
8 Service / Support . . . 109
8.1 Manufacturer's warranty . . . 109
8.1.1 Product code . . . 109
8.2 Contact details . . . 109

1 Overview

The KNX Generation 7 family from B.E.G. comprises a wide range of detectors. The family is divided into series: PD2N, PD4N, PD9, PD11, PICO and PD5N are series with different detection ranges and designs. In addition, there are series especially for wall mounting (Indoor 180, Indoor 140-L) as well as a series for outdoor use (RC plus next-N 230-KNXs-DX, Aleum Glow KNXs) and for mounting in slatted ceilings (PD5N-Lamella). Within a series, there may still be detectors with special properties. For example, there is a PD4 detector especially for great heights (GH) as well as various versions in KNX RF (radio).

The individual series are available in three different software versions. The BA (Basic) version is intended for simple, practical applications. The ST (standard) version offers a good range of functions and the DX (deluxe) version offers a more sophisticated range of functions. For example, HCL or RGB control is included.

Type	PD2			PD4			PD4 - GH	PD9	PD11		PICO		PD5N	Indoor 140-L	Indoor 180		RC plus next-N	Aleum Glow
Variants	BA	ST	DX	BA	ST	DX	DX	DX	ST	DX	ST	DX	DX	DX	ST	DX	DX	
Functions																		
Number of light sensors	2	2	2	2	2	2	1	1	1	1	1	1	2	1	1	1	1	1
Number of motion sensors	1	1	1	4	4	4	3	1	1	1	1	1	2	1	1	1	3	4
Number of HVAC outputs	–	3	3	–	3	3	3	3	3	3	3	3	3	3	3	3	3	3
Sensitivity adjustment PIR	X	X	X	X	X	X	X	X	X	X	X	X	X	X	X	X	X	X
Bidirectional remote control	–	X	X	–	X	X	X	X	X	X	X	X	X	X	X	X	X	X
End customer remote control	–	–	X	–	–	X	X	X	–	X	–	X	X	X	–	X	X	X
Temperature sensor	–	–	X	–	–	X	X	X	–	X	–	X	–	X	–	X	X	X
Sound sensor	–	–	X	–	–	X	–	–	–	X	–	–	–	–	–	X	–	–
Logic module	–	–	X	–	–	X	X	X	–	X	–	X	X	X	–	X	X	X
Presence simulation	–	–	X	–	–	X	X	X	–	X	–	X	X	X	–	X	X	X
Internal push-buttons	–	–	–	–	–	–	–	–	–	–	–	–	–	X	–	–	–	–
Internal orientation light	–	–	–	–	–	–	–	–	–	–	–	–	–	X	–	–	–	–
Ambient light	–	–	–	–	–	–	–	–	–	–	–	–	–	–	–	–	–	X
Slave output	X	X	X	X	X	X	X	X	X	X	X	X	X	X	X	X	X	X
Slave input	X	X	X	X	X	X	X	X	X	X	X	X	X	X	X	X	X	X
Switching operation	X	X	X	X	X	X	X	X	X	X	X	X	X	X	X	X	X	X
Regular operation	X	X	X	X	X	X	X	X	X	X	X	X	X	X	X	X	X	X
Semi-automatic mode/ fully automatic mode	X	X	X	X	X	X	X	X	X	X	X	X	X	X	X	X	X	X
Light scenes	–	X	X	–	X	X	X	X	X	X	X	X	X	X	X	X	X	X
Offset mode	–	X	X	–	X	X	X	X	X	X	X	X	X	X	X	X	X	X
Orientation light function	–	X	X	–	X	X	X	X	X	X	X	X	X	X	X	X	X	X
Burn-in function	–	X	X	–	X	X	X	X	X	X	X	X	X	X	X	X	X	X
Parameter changes via object	X	X	X	X	X	X	X	X	X	X	X	X	X	X	X	X	X	X
Self-adjustment of run-on time	–	X	X	–	X	X	X	X	X	X	X	X	X	X	X	X	X	X
Short presence	–	X	X	–	X	X	X	X	X	X	X	X	X	X	X	X	X	X
Direction recognition	–	–	–	–	X	X	X	–	–	–	–	–	–	–	–	–	X	X
Daylight-dependent switch-off	X	X	X	X	X	X	X	X	X	X	X	X	X	X	X	X	X	X
HCL/ RGB control	–	–	X	–	–	X	X	X	–	X	–	X	X	X	–	X	X	X
KNX Secure	X	X	X	X	X	X	X	X	X	X	X	X	X	X	X	X	X	X

Design and functions

Most series are available for different installation methods. There is a choice of a recessed ceiling (FC) and a flush-mounted (FM) variant. In addition, the flush-mounted variant can also be used for surface mounting by using a surface-mounting base. The range of functions is not influenced by the different installation variants, but depends on the selected software version. Further information and accessories can be found on the product pages of our website.

There are three different ETS applications for the KNX Gen7 family. These are the BA, ST and DX variants. They are independent of the series. The BA application can be used for the BA series PD2N and PD4N. The ST application can be used for the ST series PD2N, PD4N, PD11, PICO and Indoor 180. The DX application can be used for the DX device variants PD2N, PD4, PD9, PD11, PICO, PD5N, Indoor 180, Indoor 140-L, RC-plus next N and Aleum.

Since an ETS application can be used for different series, it can happen that a series does not support all functions of the application due to different hardware components. For example, a PD2N only has one sensor for motion detection. A PD4N, on the other hand, has 4 sensors. Using the DX application, the sensitivity of the sensors can be adjusted, i.e., 4 parameters are visible. If the detector only includes one sensor, three of the four parameters are without function. Another example is the push-button function, which can only be used for the Indoor 140-L because it has two integrated push-buttons.

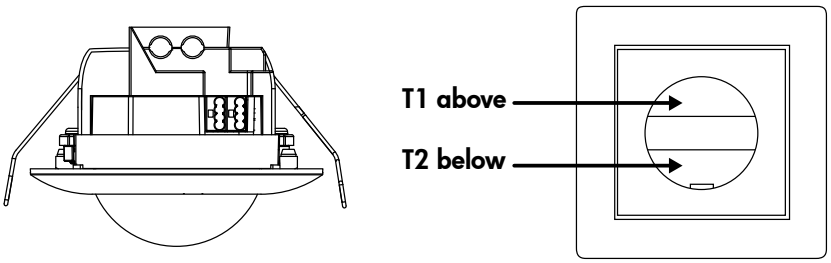

1.1 Related documents

This application description applies in conjunction with the quick start guide and the data sheet supplied with the device.

2 General

2.1 Basic information about the KNX bus

A KNX commissioning or project planning course is required to understand these instructions.

In order to be able to work with the B.E.G. applications, they must first be imported into the ETS. ETS version 5 or higher is supported.

2.2 Symbolism

In the following application description, various symbols are used for a better overview. These symbols are explained briefly here.

⚠	This symbol indicates text passages that must be read in order to avoid errors during project planning and commissioning.

2.3 KNX Data Secure

KNX Data Secure enables the secure commissioning of and communication between devices that support Data Secure. This enables encrypted transmission of group addresses between two devices that support Data Secure. With Data Secure, devices that support Data Secure can also communicate with devices that do not support Data Secure. Mixed operation in a project is therefore possible. However, if all data of a group address are to be transmitted encrypted, all devices whose objects are connected to this group address must support Data Secure.

2.3.1 Commissioning Data Secure

For each device, it can be decided whether the commissioning is to take place secured or unsecured. If the commissioning is not secured, the device is to be used as a normal device without Data Secure. By default, secure commissioning is activated in the ETS for all devices during insertion. This item can be changed by the system integrator under Device ➜ Properties ➜ Settings.

If the message to enter the FDSK for the device appears, you can skip this dialogue with the „Later“ button. Data Secure can also be activated later by activating the „secure commissioning“ and the FDSK is available.

To put Secure devices into operation, proceed as follows:

1. **Load product dacardase:**

When loading the product dacardase, you will usually be asked directly to enter the FDSK (Factory Default Setup Key, see 1.3.2) of the device.

You can enter the FDSK manually or scan the QR code via camera. If you do not want to read in the FDSK, this can also be done at a later time. To enter the FDSK later, select the respective project and select the Security card.

Here you can now select the „Add“ button and enter the FDSK or scan the QR code. The FDSK is then decoded into serial number and factory key. The assignment of which key belongs to which device is done automatically by the ETS. Thus, all FDSK used in the project can be entered one after the other.

2. **Download the application:**

Now the application can be downloaded to the device.

In order to be able to commission devices with Data Secure, at least ETS 5.7 must be used.

2.3.2 FDSK

Each Secure device is delivered with the „Factory Default Setup Key“ (FDSK). Each detector of Generation 7 has an individual FDSK (Factory Default Setup Key). This key is found in the form of a QR code on each device. This key must be entered into the ETS by the system integrator. A device-specific tool key is then generated from this. The ETS sends the tool key via the KNX bus to the device that is to be configured. This transmission is encrypted and authenticated with the FDSK key. After this initial commissioning, the device only accepts the received tool key. The FDSK is no longer required for further transmission unless the device is reset via the master reset. The FDSK of all devices in a project **must** be kept on a project-specific basis.

2.3.3 Master reset

To perform the master reset, the following sequence is required:

➜ Press the programming button briefly
➜ Wait 0.5s
➜ Press the programming button briefly
➜ Wait 0.5s
➜ Press the programming button briefly
➜ Disconnect bus voltage
➜ Hold down the programming button, connect the bus voltage and hold down for a further 5 seconds.
➜ Release programming button
➜ Programming LED lights up briefly

After approx. 20s, the device is ready for communication.

2.4 System description KNX RF devices

The KNX RF system is a manufacturer-independent KNX radio standard that operates in the 868 MHz frequency range. The maximum range is approx. 30 m in buildings and up to 150 m in open spaces. KNX RF devices can be used to expand existing KNX installations without a bus line. They support secure communication on RF, as well as on TP media couplers according to the KNX Secure standard. Wired systems are connected or extended with the RF devices via the media coupler. KNX RF is a bidirectional radio system, so that the devices can both receive and transmit information. As with TP devices, commissioning is carried out by the ETS. Due to the radio technology, additional parameters for configuration are available in the ETS, otherwise RF devices do not differ functionally from TP devices.

	ATTENTION:
⚠	KNX RF devices are operated on 230V AC mains voltage. The safety instructions according to the operating instructions must be observed.

For more information, see the KNX RF manual:

https://www.beg-luxomat.com/files/downloads/en_GB/download-infomaterial/content/Manual_KNX-RF_en_V1.pdf

3 Basics of motion detection

3.1 Introduction

In order to ensure a simple introduction to this application description, the general functions, which are motion detection and light evaluation, will be explained first.

3.2 Motion detection of the B.E.G. KNX detectors

The KNX detectors work according to the passive infrared system, which registers heat movements and converts them into signals that can be evaluated by a processor. The most important criterion for motion detection is the correct choice of installation location.

Mounting location

The occupancy detector should be mounted in such a way that the main direction of movement is always tangential (sideways to the device). The light evaluation, if required, should always take place in the darkest part of the room. This is the only way to ensure that there is sufficient light in the room.

The following sources of interference can lead to faulty switching, as they can also generate temperature differences:

1. radiant heater,
2. ventilation systems that discharge warm or cold air,
3. luminaires in the direct detection area.

The detector must be mounted at an appropriate distance from these sources.

If the smallest movements are to be detected (e.g., working with the PC keyboard), we recommend choosing the installation location directly above the desk. This ensures reliable detection.

Please be sure to observe the mounting height specified with the devices. Lower mounting heights reduce the range. Higher mounting heights increase the range. However, at the same time the detection sensitivity is reduced.

3.3 Function of the device

The device controls the lighting either motion-dependent or motion-independent.

3.3.1 Motion-dependent operation (occupancy detector)

With this mode of operation, a detected movement is always required to switch on the lighting. In switching mode, the lighting remains switched on as long as movement is detected, plus the set follow-up time. In control mode, the lighting can be switched off despite detected movement, provided there is sufficient ambient brightness.

3.3.2 Motion-independent operation (twilight detector)

With this mode of operation, the device switches the lighting on when the brightness falls below the set value and off again when it exceeds it. The channel therefore reacts independently of movement, only depending on the brightness.

The channel can be activated or deactivated via a button. When the function is activated, the device controls the lighting during the day, for example, whereas operation is not desired at night and can therefore be deactivated. This can be useful, for example, in factory halls where work is only done during the day, but the light must be switched on as soon as the light falls below a certain value.

3.4 Light evaluation

The light sensor integrated in the device constantly measures the ambient brightness and compares it with the set switch-on threshold (switching mode) or the set value (control mode). If the ambient brightness is sufficient, the lighting is not switched on. If the ambient brightness is below the set value brightness, in motion-dependent operation a movement in the room causes the lighting to be switched on, in motion-independent operation the lighting is switched on in this case even without detected movement.

3.5 Switching and regulation operation

The device can be operated in two modes: Switching mode and regulation mode. In switching mode, the light is switched on and off by means of 1-bit switching telegrams. A switching actuator is required on the actuator side for this. In regulation mode, a dimming actuator is required. 1-byte dimming telegrams (value percent) are sent on the bus.

The brightness value desired in the room can be selected at will. In switching mode, we speak of a switch-on threshold. This indicates the brightness value below which the detector should switch on the light. If a threshold of 500 lux has been set and the ambient brightness (daylight) is 200 lux, the device switches on the lighting (1). The resulting light jump of the switched luminaire is measured (2).

With a light jump of 600 lux, the detector switches the lighting off (3) as soon as the sum of the light jump and the increased ambient brightness is 1100 lux. This means that the switched amount of light (light jump) is no longer available. The ambient brightness is now 500 lux (1100 lux - 600 lux), which corresponds exactly to the value that was set as the brightness threshold.

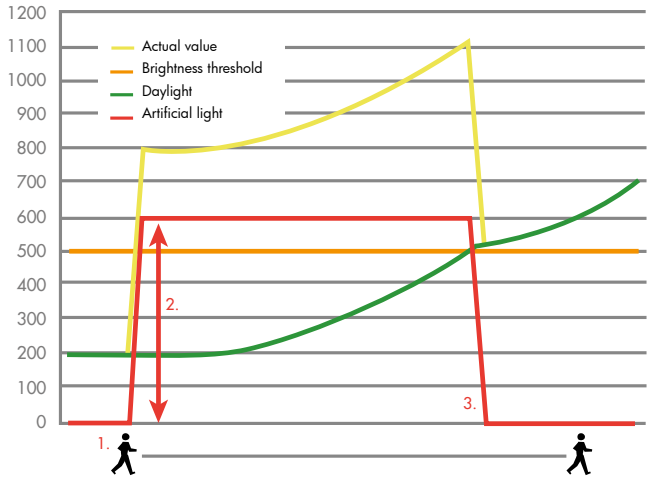

For lighting regulation, we do not speak of a brightness threshold, but of a set value. The device now sends dimming telegrams to the bus. If the value of the ambient brightness (daylight) is below the set value and the detector registers a movement (1), it switches the light on (parameterisable, here in the example to 100 %).

The light is dimmed down from the determined brightness (2) until the set value is reached. From then on, the detector controls the light (3) and keeps the brightness in the room at a constant value (set value) until an artificial light level of 0 % is reached (4).

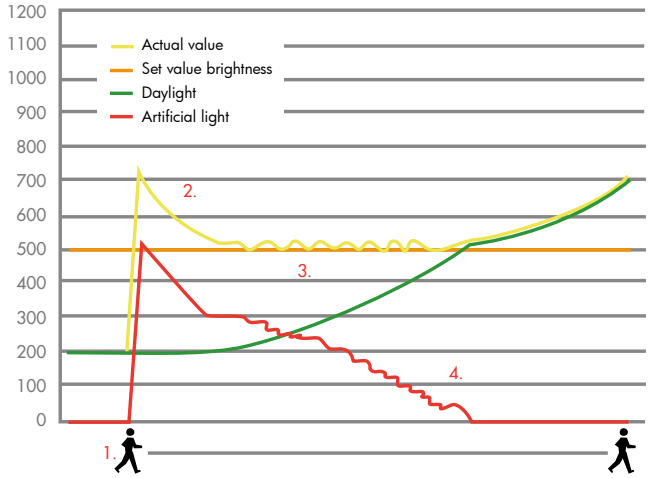

3.6 Function blocks of the detector

The occupancy detector has five outputs, the light output (LO), the HVAC outputs (HVAC 1 to HVAC 3) and the slave output (SL). To realise the function of automatic switching/regulation, all outputs access the sensors. The light measurement is set uniformly for all outputs, but a separate switch-on threshold can be set for each output or up to two set values and a fixed value (%) can be set for the light output LO in regulation mode. The sensitivity of the motion and sound detection can be adjusted for each output.

The most important output is the light output (LO). The actual function of the occupancy detector (lighting control, daylight-dependent switch-off and HCL control) is realised in this block. The slave output (SL) is used to extend the detection range. Furthermore, three HVAC outputs (heating, ventilation, air conditioning) are available. These outputs can be used to control energy-intensive systems such as air-conditioning systems. RGB control is also possible.

Additional functions can be set in the respective block. The scope of the additional functions depends on the detector variant (see chapter 1) and the detector type used.

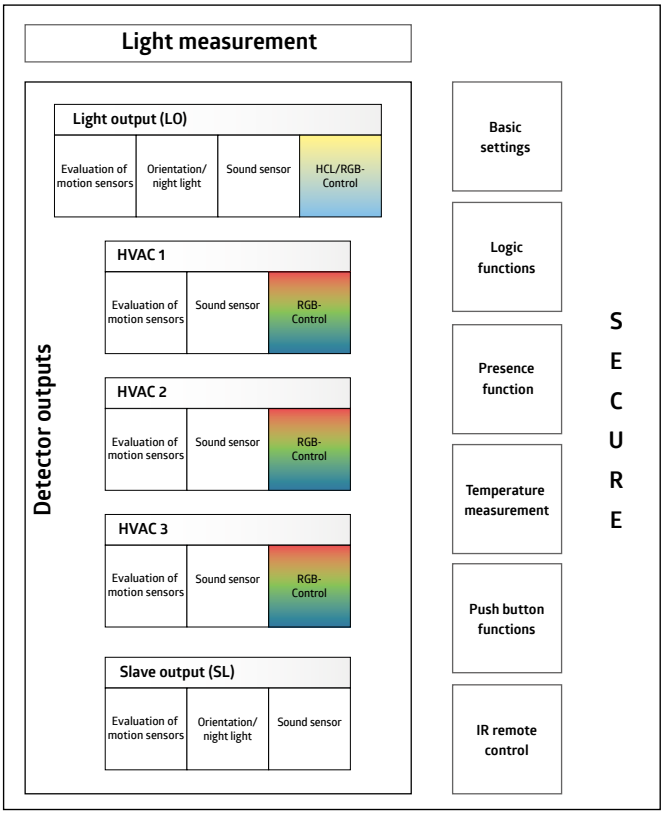

The application offers the possibility of activating the functions required for each output individually. In the first step of parameterisation, it should be determined how many and which outputs are required and these should be activated in the ETS.

Often the light in a room is to be controlled depending on daylight and the presence of people. The light output (LO) is required for this. There are also HVAC (heating/air conditioning/lighting) devices in the room that are also to be switched automatically by means of detectors. Depending on the number, the HVAC outputs HVAC1 to HVAC 3 must be added. Depending on the size of the room, a slave device is required that is controlled via the slave output (SL).

4 General structure of the application

ATTENTION	
⚠	The order of the chapters in this application description corresponds to the order in the ETS.

There are four main cards in the application that enable the basic settings. These are

1. Detector configuration
2. Light measurement configuration
3. Button configuration
4. Further configuration

As the light output is activated by default, a fifth card „LO: Detector Configuration“ is visible.

5. LO: Detector Configuration

4.1 Detector configuration

On this card, the five outputs of the detector can be activated or deactivated. For each activated channel, the respective card with the setting options is visible below the „Further configuration“ card. These are then described in another chapter.

4.2 Light measurement configuration

The settings for light measurement can be parameterised here.

4.3 Button configuration

On this card, the two push-buttons PB1 and PB2 of the Indoor 140-L as well as the five buttons of the small remote control can be activated or deactivated. For each activated button, the respective card with the setting options becomes visible below the card „Further configuration“. These are then described in another chapter.

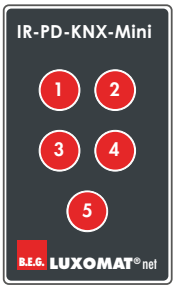

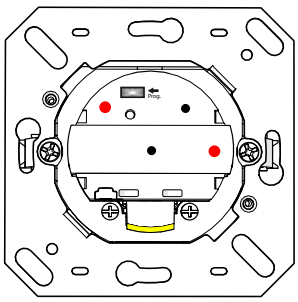

4.4 Further configuration

The Further Configuration card has the following subcards:

- HCL (Human Centric Lighting)
- Logic
- Simulation
- Temperature measurement
- Remote control
- Sound sensor
- Motion/IR LED
- Test mode
- Ambient light (only Aleum)
- Start delay
- Telegram repetitions (only for RF devices)

HCL, logic and simulation can be activated or deactivated. When the function is activated, the respective card with the setting options appears at the bottom of the left side with the available cards. The setting options available on this newly visible card are not explained in a separate chapter, but in the corresponding chapter for the card “Further configuration”.

The other parameters can be set directly without another card becoming visible.

5 Cards and parameters

5.1 Detector configuration - Settings

5.1.1 Light output (LO)

The light output can be deactivated and can operate motion-independently or motion-dependently.

A push-button input is available for both variants. This can be used to manually switch the channel on or off via a 1-bit telegram. The channel remains switched on or off until no movement has been detected for a follow-up time. The detected movement is indicated by the red movement/IR LED.

Light output (LO)	
Light output	deactivated
	motion-dependent (like an occupancy detector)
	motion-independent (like a twilight detector)

No.	Name	Function	C	R	W	T	M
44	LO: Input (DPT 1.001)	Manual influence	X	–	X	–	–

	ATTENTION
⚠	The parameters for motion-independent operation (like a twilight detector) are like the functions described for motion-dependent operation. However, there are fewer setting options. Please refer to the corresponding chapter for motion-dependent operation for a description of the functions.

5.1.2 Operation mode

In the operation mode, you can select whether the device is to operate in switching or regulation mode.

In switching mode, the lighting is switched via 1-bit telegrams.

	ATTENTION
⚠	With various PDxx-RF-KNXs-DX, the relay integrated in the detector is also switched (see product data sheet of the detectors concerned).

When using the detector in regulation mode, the detector sends a telegram (1 byte) via a value object to the actuator (DIM, DALI) for daylight-dependent control. In this way, the detector controls the connected lighting to the brightness set value.

Light output (LO)	
Operation mode	Switching mode
	Regulation mode

Switching mode

No.	Name	Function	C	R	W	T	M
67	LO: Output (DPT 1.001)	Switching	X	-	-	X	-

Regulation mode

No.	Name	Function	C	R	W	T	M
67	LO: Output (DPT 5.001)	Regulation value (group near detector)	X	-	X	X	X

5.1.3 HVAC outputs

The detector has three HVAC outputs (HVAC 1 - HVAC 3). The channels are switching outputs and can be activated independently of light due to movement, but can also switch depending on light, i.e., like the light output (LO) in switching mode. Each of the three channels is independent and can be used individually. The functions are identical for all three channels.

For each activated HVAC channel, a new card "HVAC(x): Detector Configuration" is visible, on which the setting options are available.

ATTENTION

The parameters that are the same for the HVAC channels as for the light output are not described separately. The explanation of these parameters can be found in the corresponding chapter for the light output.

No.	Name	Function	C	R	W	T	M
89	HVAC1: Output (DPT 1.001)	Switching	X	–	–	X	–
104	HVAC2: Output (DPT 1.001)	Switching	X	–	–	X	–
119	HVAC3: Output (DPT 1.001)	Switching	X	–	–	X	–

Each channel has a separate push-button input. This can be used to manually switch the channel on or off via a 1-bit telegram.

No.	Name	Function	C	R	W	T	M
79	HVAC1: Input (DPT 1.001)	Manual influence	X	–	X	–	–
94	HVAC2: Input (DPT 1.001)	Manual influence	X	–	X	–	–
109	HVAC3: Input (DPT 1.001)	Manual influence	X	–	X	–	–

5.1.4 Slave (SL)

Slave devices are used to enlarge the detection area and send information to the master device when movement is detected. The advantage of Gen7 detectors is that the master functions are retained even if the device is configured as a slave. This means that a master device can also work as a slave for another master device.

On the "Detector Configuration > Settings" card, the "Slave" parameter can be activated. Now the group object 26 (output - slave) can be linked, for example, with the group object 43 (LO: input - slave) or also the slave input objects of the HVAC channels of the master device.

In simple systems, it is sufficient to connect all slave outputs to the slave input of the corresponding channel of the master device. If a slave device detects a movement, it sends this information to the master device. The master device takes over the complete logical evaluation, such as brightness detection or setting the follow-up time, and switches on if necessary.

Slave output	
SL	**deactivated**
	activated

After activating the slave output, a card "SL: Slave Configuration" becomes visible where further settings can be made.

ATTENTION	
⚠	The parameters that are the same for the slave channel as for the light output are not described separately. The explanation of these parameters can be found in the corresponding chapter for the light output.

Slave device:

No.	Name	Function	C	R	W	T	M
26	SL: Output (DPT 1.002)	Slave (SL)	X	–	–	X	–

Master device:

No.	Name	Function	C	R	W	T	M
43	LO: Input (DPT 1.002)	Slave (SL)	X	–	X	–	–
78	HVAC1: Input (DPT 1.002)	Slave (SL)	X	–	X	–	–
93	HVAC2: Input (DPT 1.002)	Slave (SL)	X	–	X	–	–
108	HVAC3: Input (DPT 1.002)	Slave (SL)	X	–	X	–	–

5.2 Light measurement Configuration

Basics

A detector carries out the light measurement on the ceiling of the room, as it is mounted there. The amount of light is measured that is present in the room as sunlight and artificial light and is reflected to the ceiling. However, not all of the light is reflected, as the degree of reflection is strongly influenced by the nature of the floor or the furniture. The light value measured at the ceiling therefore does not correspond to the room brightness. Therefore, the reflection factor must be determined and the KNX detector must be adapted to the respective conditions.

Reflection factor

The detector measures the light reflected from the floor, the work surface or the walls. The reflection factor is the ratio of the light value measured at the room ceiling and the value measured on the work surface. This results in a reflection factor that is 1:2 to 1:3 under normal room conditions. When calculating the reflection factor, the ratio between artificial light and daylight is also taken into account. Since the spectrum of daylight is larger than that of artificial light, artificial light is evaluated by default with a ratio of 1:4, daylight with 1:2.

Depending on the device, the detector has up to two light sensors. Light sensor 1 is located in the outer ring of detectors with two light sensors, light sensor 2 behind the lens. In detectors with only one light sensor, the sensor behind the lens is sensor 1. The light sensor located behind the lens measures the light of the entire room (average value), whereas the sensor in the outer ring of the detector performs a more punctual measurement.

In addition, a group object is available. This allows, for example, the light value of a slave device to be used at another point in the room.

Types of light measurement

In addition to communication with the B.E.G. BLE/IR adapter via infrared, the detector has up to three sources available for light measurement:

(1)

Light sensor 1: This light sensor is located in the outer ring of the detector for detectors with two light sensors, and behind the lens for detectors with one light sensor.

(2)

Light sensor 2: This sensor is located behind the lens on detectors with two light sensors.

(3)

Group object 8 (Light sensor: Brightness input): This enables the integration of external light sensors.

Two types of light measurement are available. Either the smallest light value measured by up to three sources is determined or the three sources can be weighted to each other.

Light measurement configuration	
Use of the smallest measured light value (from up to three sources)	**deactivated**
	activated

If the parameter is deactivated, it is a weighted measurement. When activated, the smallest measured light value is used:

5.2.1 Weighted measurement

For devices with more than one light sensor, the weighting can be set between sensor 1, sensor 2 and the group object 8 "Light sensor: Input Brightness " (sources). This causes the different sensors to have different degrees of influence.

The weighting of the different light sensors plays a role in rooms with difficult lighting situations.

If, for example, the internal light sensor is used, it reacts extremely to changing light conditions because it receives a mixed value of light from the entire room. The optional light sensor in the outer ring measures the light more selectively and is therefore not as sensitive to external influences. However, a change in the light situation in the immediate vicinity of the measuring point is problematic. For example, if the detector is mounted above the desk, which has a dark work surface, a white sheet of paper leads to a change in the lighting situation, which can result in the detector dimming down the lighting. By weighting the sensors, these influences can be mitigated.

Light measurement configuration	
Weighting light sensor 1 (0 = is not used) ((only visible with "Deactivation use of the smallest measured light value (from up to 3 sources)".	0...10 **(1)**

Light measurement configuration	
Weighting light sensor 2 (0 = is not used) ((only visible with "deactivation use of the smallest measured light value (from up to 3 sources)".	0...10 **(0)**

Light measurement configuration	
Weighting of group object Brightness (0 = is not used) ((only visible with "deactivation use of the smallest measured light value (from up to 3 sources)".	0...10 **(0)**

If a detector type or detector variant does not support a source, a "0" (= not available) must be set for this source in the ETS.

5.2.2 Smallest measured light value

If a room has two window fronts facing each other, the darkest point of the room will move from one window front to the other during the course of the day. Since the light measurement should always be designed in relation to the darkest point of the room, it is recommended to install a master-slave system or a detector with an additional external brightness sensor here.

If the master device is on the side facing away from the sun in the morning and the slave device is on the side facing the sun at that time, the master device takes its own brightness value into account for the measurement. It also compares its own measured light value with the value measured by the slave device. As soon as the measured brightness value of the slave device is lower than that of the master device due to the changing position of the sun, this is used as the

basis for light control. Thus, a measurement of the brightness value at the darkest point is guaranteed even with changing light conditions.

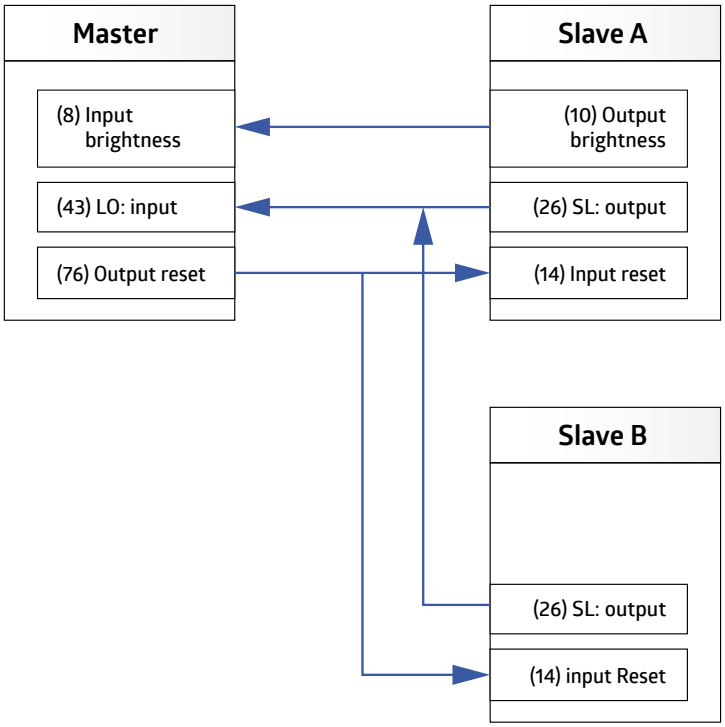

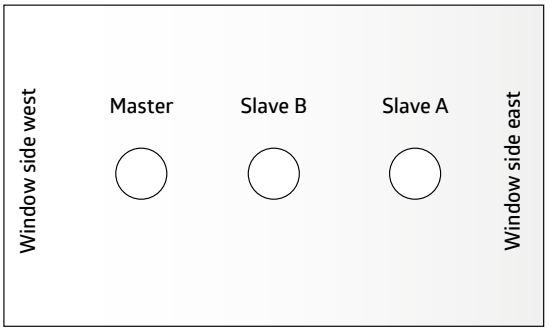

Light measurement configuration	
Light sensor 1 (only visible with "use of the smallest measured light value (from up to 3 sources)" activated)	**use** do not use

Light measurement configuration	
Light sensor 2 (DEVICE VARIANT WITH TWO SENSORS!) (only visible with "use of the smallest measured light value (from up to 3 sources)" activated)	**use** do not use

Light measurement configuration	
Group object Brightness (only visible with "use of the smallest measured light value (from up to 3 sources)" activated)	**use** do not use

If this parameter is activated (with simultaneous deactivation of the determination of the reflection factor via the BLE/IR adapter), a natural light adjustment can be made. This is necessary because the natural light conditions change due to the varying position of the sun during the course of the day and these cannot be measured accurately during light measurement. The artificial light component is assumed to be identical for the master and the slave device. Therefore, if the lowest light value is measured by the slave device, its light value is used for lighting control. However, since the measured value is evaluated by the master device, the reflection factor of the group object Brightness must also be included in the calculation. This is done by specifying the factor of group object 8 for natural light adjustment in %. If this value is set to 100, the reflection factor of the master device is used. If the factor is set to 50, the reflection factor of the master is halved, or doubled with the value 200.

Light measurement configuration	
Factor group object 8 for daylight adaptation in % (only visible if parameter "Use of the smallest measured light value (from up to 3 sources)" is activated).	0...200 **(100)**

No.	Name	Function	C	R	W	T	M
8	Light sensor: Input (DPT 9.004)	Brightness	X	-	X	X	X

The "Brightness" group object is monitored by the application. If the external light sensor fails, it is removed from the measurement and light sensor 1 automatically takes over the measurement. The monitoring is based on the parameterised monitoring time. The detector receives the light value "cyclically" or "upon modification" depending on the setting for the slave device.

NOTE

The sending cycle of the slave device must be within the monitoring time of the master device.

Light measurement configuration	
Read group object Brightness on bus voltage return (only visible with "use")	**activated** deactivated

Light measurement configuration	
Monitor group object Brightness in minutes (0= no monitoring) (only visible with "use")	0...255 **(10)**

5.2.3 Adjusting the measured value using the BLE/IR adapter (art. no. 93067)

If the brightness at the workplace is determined by a brightness measurement on the ceiling and a reflection factor, measurement inaccuracies always occur. The optional BLE/IR adapter (accessory, part number 93067) can significantly improve the measurement.

The BLE/IR adapter is placed on the workstation (whereby the detector must be in line of sight). Thus, it always measures where the target brightness should be. It sends infrared signals with the measured brightness value to the detector.

The BLE/IR adapter can optionally be used as follows:

Receive permanently

In this mode, the BLE/IR adapter sends the measured brightness to the detector. The detector then dynamically determines a reflection factor from this value, i.e., it constantly adjusts the factor to the current situation. If the BLE/IR adapter fails, the detector uses the last valid value. In this case, the motion LED of the detector flashes to indicate that no more signals are being received via IR.

24h learning phase

The learning phase can be activated or deactivated using a group object and/or the remote control. In this case, the BLE/IR adapter only remains on the workstation for the corresponding period of time and the detector saves the measured light curve over the period of time and uses this as the basis for lighting control.

An additional correction value of +/- 200 lux can be entered in case of inaccuracies.

Light measurement configuration	
Determination of reflection factor via BLE/IR adapter	**deactivated**
	activated

Light measurement configuration	
Measured light values will be received via BLE/IR adapter (only visible when "Determine reflection factor via BLE/IR adapter" is activated)	**permanently**
	during the 24h learning phase

Light measurement configuration	
Correction value in LUX (only visible when "Determination of reflection factor via BLE/IR adapter" is activated)	-200...200 **(0)**

Light measurement configuration	
Learning phase start/stop (only visible if "Determination of reflection factor via BLE/IR adapter" and "Measured light values will be received via BLE/IR adapter → during the 24h learning phase" are activated)	**via group object**
	via remote control
	via group object and remote control

No.	Name	Function	C	R	W	T	M
9	Light sensor: Input (DPT 1.010)	Learning Start/Stop	X	-	X	-	-

5.2.4 Adjustment of the measured value using external values

A distinction is made between “mixed light” and “artificial light and daylight”. Furthermore, the parameter can be deactivated.

If the parameter is activated, values can be entered manually, which are measured under the ceiling and on the working surface.

The brightness value at the workstation and at the detector must be determined. In the “mixed light” setting, two measured values must be determined, and in the “artificial light and daylight” setting, four measured values must be determined.

Artificial light:

Only the switched light may be present during this measurement. Natural light must not fall into the room. A measurement can therefore only be taken at night or when the shutters are closed.

Daylight:

Here, the measurement must only be carried out with the incident natural light. All luminaires present in the room must be switched off.

Mixed light:

Measurements are taken with the lighting switched on (the luminaires that the detector is to switch/regulate) and with incident natural light.

When the setting is deactivated, a reflection factor of 1:1 is assumed. An additional correction value of +/- 200 lux can be entered in case of inaccuracies.

To achieve the best possible results in lighting control, the setting “artificial light and daylight” is recommended.

Light measurement configuration	
Adjustment of the measured value using external values	deactivated
	mixed light
	artificial and daylight

Procedure:

With the "mixed light" setting

Step 1:

The parameter "Adjustment of measured value using external measured values" must first be deactivated so that the measured light value of the detector is output to the bus. The brightness value should be sent cyclically. (see chapter 4.4)

Step 2:

Open the blinds, switch on the lights.

Note the light value of the detector under the ceiling.

Note the light value of the luxmeter on the work surface.

Step 3:

Activate parameter "Adjustment of measured value using external values" and enter the measured values.

With setting "Artificial light and daylight"

Step 1:

The parameter "Adjustment of the measured value using external values" must first be deactivated so that the measured light value of the detector is output to the bus.

Step 2:

Close the blinds, switch on the lighting.

Note the light value of the detector under the ceiling.

Note the light value of the luxmeter on the work surface.

Step 3:

Open the blinds, switch off the lights.

Note the light value of the detector under the ceiling.

Note the light value of the luxmeter on the work surface.

Activate the parameter "Adjustment of the measured value using external values" and enter the measured values.

After entering the corresponding light values, the calculated light value is output on the bus. The value of the luxmeter on the desktop should now be similar to the value output on the bus.

For more information:

NOTE
If the artificial and daylight parameter is selected, the calculated light value is only output on the bus when the detector has completed the set learning time.

Light measurement configuration	
Artificial light - measured value ceiling In LUX (only visible with activation "Artificial and daylight")	1...2000 **(100)**

Light measurement configuration	
Artificial light - measured value desk In LUX (only visible with activation "Artificial and daylight")	1...2000 **(400)**

Light measurement configuration	
Daylight - measured value ceiling In LUX (only visible with activation "Artificial and daylight")	1...2000 **(100)**

Light measurement configuration	
Daylight – measured value desk In LUX (only visible with activation "Artificial and daylight")	1...2000 **(200)**

If the parameter “mixed light” is selected, the values for natural light are omitted.

5.2.5 Send brightness value

The measured brightness value can be used for light measurement via the external brightness object with the help of the “Send brightness value” parameter. This object is available for both the master and slave devices. The measured light value is sent in the off state. In the on state, it is **only sent after the switch-off threshold has been determined** or with the **“mixed light” setting in order** to obtain the exact value. Sending takes place either cyclically or upon modification.

Light measurement configuration	
Send brightness value	**deactivated**
	upon modification
	cyclically
	upon modification and cyclically

Light measurement configuration	
Cycle time (only visible when "Send brightness value" is activated)	00:01...60:00 mm:ss **(00:05)**

Light measurement configuration	
Modification In LUX (only visible when "Send brightness value" is activated)	1...200 **(10)**

No.	Name	Function	C	R	W	T	M
10	Light sensor: output (DPT 9.004)	Brightness	X	-	-	X	-

5.3 Button configuration

Under the "Button configuration" card, the push-buttons PB1 and PB2 (Indoor 140-L) can be activated or deactivated individually. Furthermore, for the 5-button remote control available for the DX variant, each button (IR1 to IR5) can be activated or deactivated individually.

When activating an option (PB as well as IR), a new card is then visible on the left side, on which setting options are available.

Button configuration	
PB 1	**deactivated**
	activated

Button configuration	
PB 2	**deactivated**
	activated

Button configuration	
IR 1	**deactivated**
	activated

Button configuration	
IR 2	**deactivated**
	activated

Button configuration	
IR 3	**deactivated**
	activated

Button configuration	
IR 4	**deactivated**
	activated

Button configuration	
IR 5	**deactivated**
	activated

The following parameters can be set on the „PBx: Configuration" or „IRx: Configuration" card visible when the button is activated:

5.3.1 Debounce time in ms (PBx/IRx: configuration)

The adjustable duration describes the minimum period of time that the signal must be present before it can be evaluated. The debounce time prevents short disturbances from being recognised as signals.

PBx/IRx > Settings	
Debounce time in ms	30 ... 200 **(30)**

5.3.2 Operation mode (PBx/IRx: configuration)

The following options are available:

PBx/IRx > Settings	
Operation mode	**switching**
	dimming
	blinds / roller shutters
	scene

5.3.2.1 Further parameters for operation mode "Switching"

The selected and correspondingly parameterised button can be used in this operation mode to switch the lighting, for example, whereby an action can be carried out by pressing and/or releasing it.

Various object types are initially available for selection in the parameters. With the "Switching" object type, 1-bit telegrams are sent to switch on, off or toggle. With forced operation, a 2-bit telegram with a higher prioritisation is used to switch in order to override an automatic system if necessary. A light level can be specified via the percentage value (8 bit).

	NOTE
	In toggle mode, it is necessary for the detector to receive feedback when the load is toggled externally. Either the external toggling takes place via the object / group address „Switching", which is also used by the detector, or the actuator sends a feedback note, which must then be placed on the object / group address „Toggle mode feedback". Both options are equivalent.

PBx/IRx > Settings	
Object type	**switching**
	forced operation
	value in %

PBx/IRx > Settings	
Reaction when pressing the button (only visible with the object type Switching)	none
	switch on
	switch off
	toggle

PBx/IRx > Settings	
Reaction when releasing the button (only visible with the object type Switching)	**none**
	switch on
	switch off
	toggle

PBx/IRx > Settings	
Reaction when pressing the button (only visible with the object type "forced operation")	none
	forced switch-on "3"
	forced switch-off "2"
	forced operation inactive "0"

PBx/IRx > Settings	
Reaction when releasing the button (only visible with the object type "forced operation")	**none**
	forced switch-on "3"
	forced switch-off "2"
	forced operation inactive "0"

PBx/IRx > Settings	
Reaction when pressing the button (only visible with the object type "Value in %")	none
	send value

PBx/IRx > Settings	
Value in % (only visible with the object type "Send value")	0 ... 100 **(0)**

PBx/IRx > Settings	
Reaction when releasing the button (only visible with the object type "Value in %")	none
	send value

PBx/IRx > Settings	
Value in % (only visible with the object type "Send value")	0 ... 100 **(0)**

Furthermore, the locking function can be activated or deactivated. When the locking function is activated, the reaction for locking and unlocking can be selected, as well as the reaction on bus voltage return.

PBx/IRx > Settings	
Locking function	**deactivated**
	activated

PBx/IRx > Settings	
Reaction on locking (only visible with locking function "activated")	**none**
	same reaction as when pressing the button
	same reaction as when releasing the button

PBx/IRx > Settings	
Reaction on unlocking (only visible with locking function "activated")	**none**
	same reaction as when pressing the button
	same reaction as when releasing the button

PBx/IRx > Settings	
Reaction upon bus voltage return	**none**
	same reaction as when pressing the button
	same reaction as when releasing the button

5.3.2.2 Further parameters for operating mode “Dimming”

When dimming, a distinction is made between long and short button presses. A short press switches the light on or off, a long press dims the light up or down.

	NOTE
i	In toggle mode, it is necessary for the detector to receive feedback when the luminaire is toggled externally. Either the external toggling takes place via the „Dimming“ object / group address that is also used by the detector, or the actuator sends a feedback message that must then be placed on the „toggle mode feedback“ object / group address. Both options are equivalent.

The 4-bit dimming command is triggered by a long button press. The length of the long button press can be set.

PBx/IRx > Settings	
Long button press from in 100ms steps	3 ... 50 **(6)**

The dimming direction can be controlled either with two separate buttons for brighter and darker or with one button for both directions. The dimming direction is reversed by pressing and holding again.

PBx/IRx > Settings	
Dimming direction	brighter
	darker
	brighter and darker (toggle)

PBx/IRx > Settings	
Dimming step + in %	**100**
	50
	25
	12
	6
	3
	1,5

PBx/IRx > Settings	
Dimming step - in %	**100**
	50
	25
	12
	6
	3
	1,5

PBx/IRx > Settings	
Locking function	**deactivated**
	activated

PBx/IRx > Settings	
Reaction on locking (only visible with locking function "activated")	**none**
	switch on
	switch off
	value in %

PBx/IRx > Settings	
Reaction on unlocking (only visible with locking function "activated")	**none**
	switch on
	switch off
	value in %

PBx/IRx > Settings	
Reaction upon bus voltage return	**none**
	switch on
	switch off
	value in %

No.	Name	Function	C	R	W	T	M
122	PB1: Output (DPT 1.001)	Switching	X	–	X	X	–
127	PB2: Output (DPT 1.001)	Switching	X	–	X	X	–

No.	Name	Function	C	R	W	T	M
132	IR1: Output (DPT 1.001)	Switching	X	–	X	X	–
137	IR2: Output (DPT 1.001)	Switching	X	–	X	X	–
142	IR3: Output (DPT 1.001)	Switching	X	–	X	X	–
147	IR4: Output (DPT 1.001)	Switching	X	–	X	X	–
152	IR5: Output (DPT 1.001)	Switching	X	–	X	X	–

No.	Name	Function	C	R	W	T	M
126	PB1: Input (DPT 1.001)	Toggle mode feedback	X	–	X	–	–
131	PB2: Input (DPT 1.001)	Toggle mode feedback	X	–	X	–	–

No.	Name	Function	C	R	W	T	M
136	IR1: Input (DPT 1.001)	Toggle mode feedback	X	–	X	–	–
141	IR2: Input (DPT 1.001)	Toggle mode feedback	X	–	X	–	–
146	IR3: Input (DPT 1.001)	Toggle mode feedback	X	–	X	–	–
151	IR4: Input (DPT 1.001)	Toggle mode feedback	X	–	X	–	–
156	IR5: Input (DPT 1.001)	Toggle mode feedback	X	–	X	–	–

No.	Name	Function	C	R	W	T	M
122	PB1: Output (DPT 5.001)	Value	X	–	–	X	–
127	PB2: Output (DPT 5.001)	Value	X	–	–	X	–

No.	Name	Function	C	R	W	T	M
132	IR1: Output (DPT 5.001)	Value	X	–	–	X	–
137	IR2: Output (DPT 5.001)	Value	X	–	–	X	–
142	IR3: Output (DPT 5.001)	Value	X	–	–	X	–
147	IR4: Output (DPT 5.001)	Value	X	–	–	X	–
152	IR5: Output (DPT 5.001)	Value	X	–	–	X	–

No.	Name	Function	C	R	W	T	M
122	PB1: Output (DPT 2.001)	Forced operation	X	–	–	X	–
127	PB2: Output (DPT 2.001)	Forced operation	X	–	–	X	–

No.	Name	Function	C	R	W	T	M
132	IR1: Output (DPT 2.001)	Forced operation	X	–	–	X	–
137	IR2: Output (DPT 2.001)	Forced operation	X	–	–	X	–
142	IR3: Output (DPT 2.001)	Forced operation	X	–	–	X	–
147	IR4: Output (DPT 2.001)	Forced operation	X	–	–	X	–

No.	Name	Function	C	R	W	T	M
152	IR5: Output (DPT 2.001)	Forced operation	X	–	–	X	–

No.	Name	Function	C	R	W	T	M
123	PB1: Output (DPT 3.007)	Dimming command	X	–	X	X	–
128	PB2: Output (DPT 3.007)	Dimming command	X	–	X	X	–

No.	Name	Function	C	R	W	T	M
133	IR1: Output (DPT 3.007)	Dimming command	X	–	X	X	–
138	IR2: Output (DPT 3.007)	Dimming command	X	–	X	X	–
143	IR3: Output (DPT 3.007)	Dimming command	X	–	X	X	–
148	IR4: Output (DPT 3.007)	Dimming command	X	–	X	X	–
153	IR5: Output (DPT 3.007)	Dimming command	X	–	X	X	–

No.	Name	Function	C	R	W	T	M
124	PB1: Output (DPT 5.001)	Value	X	–	–	X	–
129	PB2: Output (DPT 5.001)	Value	X	–	–	X	–

No.	Name	Function	C	R	W	T	M
135	IR1: Input (DPT 5.001)	Value	X	–	–	X	–
140	IR2: Input (DPT 5.001)	Value	X	–	–	X	–
145	IR3: Input (DPT 5.001)	Value	X	–	–	X	–
150	IR4: Input (DPT 5.001)	Value	X	–	–	X	–
155	IR5: Input (DPT 5.001)	Value	X	–	–	X	–

No.	Name	Function	C	R	W	T	M
126	PB1: Input (DPT 1.001)	Status feedback	X	–	X	–	–
131	PB2: Input (DPT 1.001)	Status feedback	X	–	X	–	–

No.	Name	Function	C	R	W	T	M
136	IR1: Output (DPT 1.001)	Status feedback	X	–	X	–	–
141	IR2: Output (DPT 1.001)	Status feedback	X	–	X	–	–
146	IR3: Output (DPT 1.001)	Status feedback	X	–	X	–	–
151	IR4: Output (DPT 1.001)	Status feedback	X	–	X	–	–
156	IR5: Output (DPT 1.001)	Status feedback	X	–	X	–	–

No.	Name	Function	C	R	W	T	M
125	PB1: Input (DPT 1.001)	Lock	X	–	X	–	–
130	PB2: Input (DPT 1.001)	Lock	X	–	X	–	–

No.	Name	Function	C	R	W	T	M
135	IR1: Input (DPT 1.001)	Lock	X	–	X	–	–
140	IR2: Input (DPT 1.001)	Lock	X	–	X	–	–
145	IR3: Input (DPT 1.001)	Lock	X	–	X	–	–
150	IR4: Input (DPT 1.001)	Lock	X	–	X	–	–
155	IR5: Input (DPT 1.001)	Lock	X	–	X	–	–

5.3.2.3 Further parameters for operating mode: “Blinds / Shutters”

To control blinds or shutters, the step and move commands are required. These can be defined by pressing the button briefly or for a long time. Pressing the button for a long time triggers the move command and pressing the button for a short time stops or moves the blinds step by step.

As a rule, more than one step command is executed in succession to adjust the slats. A change of direction only occurs after a time window has elapsed.

	NOTE
	In toggle mode, it is necessary for the detector to receive feedback when the blind / shutter is controlled externally. Either the external switching is done via the object / group address „Move command“, which is also used by the detector, or the actuator sends a feedback message, which must then be placed on the object / group address „Toggle mode Feedback“. Both possibilities are equivalent.

The 4-bit dimming command is triggered by a long button press. The length of the long button press can be set.

PBx/IRx > Settings	
Long button press from in 100ms steps	3 ... 50 **(6)**

PBx/IRx > Settings	
Reaction to short button press	none
	step up
	step down
	step up/down (toggle)

PBx/IRx > Settings	
Steps in the same direction in 100ms steps	5 ... 50 **(20)**

PBx/IRx > Settings	
Reaction to long button press	none
	move up
	move down
	move up/down (toggle)

PBx/IRx > Settings	
Locking function	**deactivated**
	activated

PBx/IRx > Settings	
Slats reaction upon locking (only visible with locking function "activated")	**none**
	step up
	step down

PBx/IRx > Settings	
Slats reaction upon unlocking (only visible with locking function "activated")	**none**
	step up
	step down

PBx/IRx > Settings	
Blinds reaction upon locking (only visible with locking function "activated")	**none**
	move up
	move down

PBx/IRx > Settings	
Blinds reaction upon unlocking (only visible with locking function "activated")	**none**
	move up
	move down

PBx/IRx > Settings	
Slats reaction upon bus voltage return	**none**
	step up
	step down

PBx/IRx > Settings	
Blinds reaction upon bus voltage return	**none**
	move up
	move down

No.	Name	Function	C	R	W	T	M
122	PB1: Output (DPT 1.007)	Slats stop / step object	X	–	X	X	–
127	PB2: Output (DPT 1.007)	Slats stop / step object	X	–	X	X	–

No.	Name	Function	C	R	W	T	M
132	IR1: Output (DPT 1.007)	Slat stop/step object	X	–	X	X	–
137	IR2: Output (DPT 1.007)	Slat stop/step object	X	–	X	X	–
142	IR3: Output (DPT 1.007)	Slat stop/step object	X	–	X	X	–
147	IR4: Output (DPT 1.007)	Slat stop/step object	X	–	X	X	–
152	IR5: Output (DPT 1.007)	Slat stop/step object	X	–	X	X	–

No.	Name	Function	C	R	W	T	M
123	PB1: Output (DPT 1.008)	Move command	X	–	X	X	–
128	PB2: Output (DPT 1.008)	Move command	X	–	X	X	–

No.	Name	Function	C	R	W	T	M
133	IR1: Output (DPT 1.008)	Move command	X	–	X	X	–
138	IR2: Output (DPT 1.008)	Move command	X	–	X	X	–
143	IR3: Output (DPT 1.008)	Move command	X	–	X	X	–
148	IR4: Output (DPT 1.008)	Move command	X	–	X	X	–
153	IR5: Output (DPT 1.008)	Move command	X	–	X	X	–

No.	Name	Function	C	R	W	T	M
126	PB1: Input (DPT 1.008)	Feedback up/down	X	–	X	–	–
131	PB2: Input (DPT 1.008)	Feedback up/down	X	–	X	–	–

No.	Name	Function	C	R	W	T	M
136	IR1: Output (DPT 1.001)	Feedback up/down	X	–	X	–	–
141	IR2: Output (DPT 1.001)	Feedback up/down	X	–	X	–	–
146	IR3: Output (DPT 1.001)	Feedback up/down	X	–	X	–	–
151	IR4: Output (DPT 1.001)	Feedback up/down	X	–	X	–	–
156	IR5: Output (DPT 1.001)	Feedback up/down	X	–	X	–	–

No.	Name	Function	C	R	W	T	M
125	PB1: Input (DPT 1.001)	Lock	X	–	X	–	–
130	PB2: Input (DPT 1.001)	Lock	X	–	X	–	–

No.	Name	Function	C	R	W	T	M
135	IR1: Input (DPT 1.001)	Lock	X	–	X	–	–
140	IR2: Input (DPT 1.001)	Lock	X	–	X	–	–
145	IR3: Input (DPT 1.001)	Lock	X	–	X	–	–
150	IR4: Input (DPT 1.001)	Lock	X	–	X	–	–
155	IR5: Input (DPT 1.001)	Lock	X	–	X	–	–

5.3.2.4 Further parameters for operating mode “Scene”

A scene is used to combine certain, partly interdependent “switching states”.

For example, different scenes for eating or watching television can be set up in the living and dining areas. Optionally, the lighting, the shading and also the actuators of the sockets can be combined with each other. For example, in the ‘television’ scene, the lighting can be dimmed to a low level and the roller shutters/blinds can be closed. In the commercial sector, scenes can be used in conference rooms. As an example: In the “Meeting” scene, all luminaires run at 100 %, whereas in the “Lecture” scene, the lights are dimmed, the blinds are closed and the screen is lowered.

Scenes can be learned as well as recalled. The corresponding scene number 0 ... 63 can be selected in the parameters and, if the parameter “Learn scene” is activated, the corresponding scene can be learned by pressing and holding the button.

PBx/IRx > Settings	
Scene number	1 ... 64 **(1)**

If this parameter is activated, the scene can be taught-in by means of a long button press if the following parameter has been activated.

PBx/IRx > Settings	
Learn scene	**deactivated**
	activated

The long button press for learning the scene can be defined here.

PBx/IRx > Settings	
Long button press from in 100ms steps	3 ... 50 **(50)**

PBx/IRx > Settings	
Locking function	**deactivated**
	activated

PBx/IRx > Settings	
Reaction upon locking (only visible with locking function "activated")	**none**
	recall scene

PBx/IRx > Settings	
Reaction upon unlocking (only visible with locking function "activated")	**none**
	recall scene

PBx/IRx > Settings	
Reaction upon bus voltage return	**none**
	recall scene

PBx/IRx > Settings	
Scene number (only visible with "Retrieve scene")	1 ... 64 **(1)**

No.	Name	Function	C	R	W	T	M
122	PB1: Output (DPT 18.001)	Scene	X	-	X	X	-
127	PB2: Output (DPT 18.001)	Scene	X	-	X	X	-

No.	Name	Function	C	R	W	T	M
132	IR1: Output (DPT 18.001)	Scene	X	-	-	X	-
137	IR2: Output (DPT 18.001)	Scene	X	-	-	X	-
142	IR3: Output (DPT 18.001)	Scene	X	-	-	X	-
147	IR4: Output (DPT 18.001)	Scene	X	-	-	X	-
152	IR5: Output (DPT 18.001)	Scene	X	-	-	X	-

No.	Name	Function	C	R	W	T	M
125	PB1: Input (DPT 1.001)	Lock	X	-	X	-	-
130	PB2: Input (DPT 1.001)	Lock	X	-	X	-	-

No.	Name	Function	C	R	W	T	M
135	IR1: Input (DPT 1.001)	Lock	X	-	X	-	-
140	IR2: Input (DPT 1.001)	Lock	X	-	X	-	-
145	IR3: Input (DPT 1.001)	Lock	X	-	X	-	-
150	IR4: Input (DPT 1.001)	Lock	X	-	X	-	-
155	IR5: Input (DPT 1.001)	Lock	X	-	X	-	-

5.4 Further configuration

5.4.1 HCL

HCL is the abbreviation for Human Centric Lighting. With HCL, the colour temperature and brightness of compatible DALI luminaires (DALI Device Type 8) are automatically changed during the course of the day. This change takes place slowly and imperceptibly in small steps. The lighting is based on natural daylight, which has a positive influence on well-being, performance and the natural sleep rhythm.

The luminaires are controlled via a suitable DALI/KNX gateway (recommendation: part no. 93302)

On this card, the function can only be activated or deactivated. When the function is activated, the card “HCL: Configuration” appears on the left side with the setting options.

Further configuration > HCL	
HCL	**deactivated**
	activated

The following parameters can be set on the „HCL: Configuration“ card that is visible when the function is activated:

5.4.1.1 Building type (HCL: Configuration)

You can choose between predefined and freely selectable HCL curves, each for the building type office, industry and school.

HCL: Configuration > Building type	
Building type (only visible with HCL "activated")	**Office (fix)**
	Industry (fix)
	School (fix)
	Office (modifiable)
	Industry (modifiable)
	School (modifiable)

For the respective "fixed" variant, there are stored HCL curves that specify the brightness value and the associated colour temperature over 24 hours.

All profiles are designed to have an activating effect from morning to afternoon with increasing brightness and colour temperature. During midday and from late afternoon, the activating effect is reduced. The lighting goes into the warm white range and to the lower light level. Overnight, the lighting remains at this setting.

5.4.1.2 Automatic adjustment (HCL: configuration)

If a fixed curve is selected, the data of the curve is displayed during the automatic adjustment. If a modifiable curve is selected, the values of the curve can be adjusted per hour. This applies to both the colour temperature (K) and the brightness value (lux). The range for the colour temperature is between 1000 and 12000 K, the range for the brightness is between 5 and 2000 lux.

	NOTE
	The manufacturer accepts no responsibility for changed curves.

The values for the set curves are as follows:

Office

Time	Colour temperature in K	Brightness value in lux
01:00 AM	3500	500
02:00 AM	3500	500
03:00 AM	3500	500
04:00 AM	3500	500
05:00 AM	3500	500
06:00 AM	3500	500
07:00 AM	5500	350
08:00 AM	5500	350
09:00 AM	5500	350
10:00 AM	5500	350
11:00 AM	3500	500
12:00 PM	3500	500
01:00 PM	5500	350
02:00 PM	5500	350
03:00 PM	3500	500
04:00 PM	3500	500
05:00 PM	3500	500
06:00 PM	3500	500
07:00 PM	3500	500
08:00 PM	3500	500
09:00 PM	3500	500
10:00 PM	3500	500
11:00 PM	3500	500
12:00 AM	3500	500

Industry

Time	Colour temperature in K	Brightness value in lux
01:00 AM	3500	150
02:00 AM	3500	150
03:00 AM	3500	150
04:00 AM	3500	150
05:00 AM	3500	150
06:00 AM	3500	150
07:00 AM	3500	150
08:00 AM	3500	150
09:00 AM	5500	350
10:00 AM	5500	350
11:00 AM	5500	350
12:00 PM	3500	150
01:00 PM	3500	150
02:00 PM	5500	350
03:00 PM	5500	350
04:00 PM	3500	150
05:00 PM	3500	150
06:00 PM	3500	150
07:00 PM	3500	150
08:00 PM	3500	150
09:00 PM	3500	150
10:00 PM	3500	150
11:00 PM	3500	150
12:00 AM	3500	150

School

Time	Colour temperature in K	Brightness value in lux
01:00 AM	3500	500
02:00 AM	3500	500
03:00 AM	3500	500
04:00 AM	3500	500
05:00 AM	3500	500
06:00 AM	3500	500
07:00 AM	5500	350
08:00 AM	5500	350
09:00 AM	5500	350
10:00 AM	5500	350
11:00 AM	5500	500
12:00 PM	3500	500
01:00 PM	3500	350
02:00 PM	5500	350
03:00 PM	5500	350
04:00 PM	3500	500
05:00 PM	3500	500
06:00 PM	3500	500
07:00 PM	3500	500
08:00 PM	3500	500
09:00 PM	3500	500
10:00 PM	3500	500
11:00 PM	3500	500
12:00 AM	3500	500

5.4.1.3 Settings (HCL: Configuration)

In order for the detector to send the values of the curve according to the current time, it needs the time information via a group object. Here you can choose between the DTP 10.001 for time and the DPT 19.001 for time and date.

HCL: Configuration > Settings	
Time source	**time format (DPT 10.001)**
	time & date format (DPT 19.001)

No.	Name	Function	C	R	W	T	M
30	HCL: Input (DPT 10.001) (DPT 19.001)	Time/date	X	–	X	–	–

The reference value of the brightness for the curves is 500 lux by default. This reference value can be adjusted. Thus, the entire curve shifts up or down depending on the reference value and the value of the brightness shift via group object 33.

Example:

If the reference value is 500 lux and the external value via group object 33 is 600 lux, all values of the curve shift upwards by 100 lux.

HCL: Configuration > Settings	
Reference value for brightness shift in Lux	5 ... 2000 **(500)**

No.	Name	Function	C	R	W	T	M
33	HCL: Input (DPT 9.004)	Brightness shift	X	-	X	-	-

The group objects for the colour temperature (34) and the control value (67) are linked to the input objects of the actuator. The brightness object from the HCL module (35) is linked to the set value object of the detector (49), as the brightness value in the case of HCL control is dependent on the stored curve (see figure).

No.	Name	Function	C	R	W	T	M
34	HCL: Output (DPT 7.006)	Colour temperature	X	-	-	X	-
35	HCL: Output (DPT 9.004)	Brightness value	X	-	-	X	-

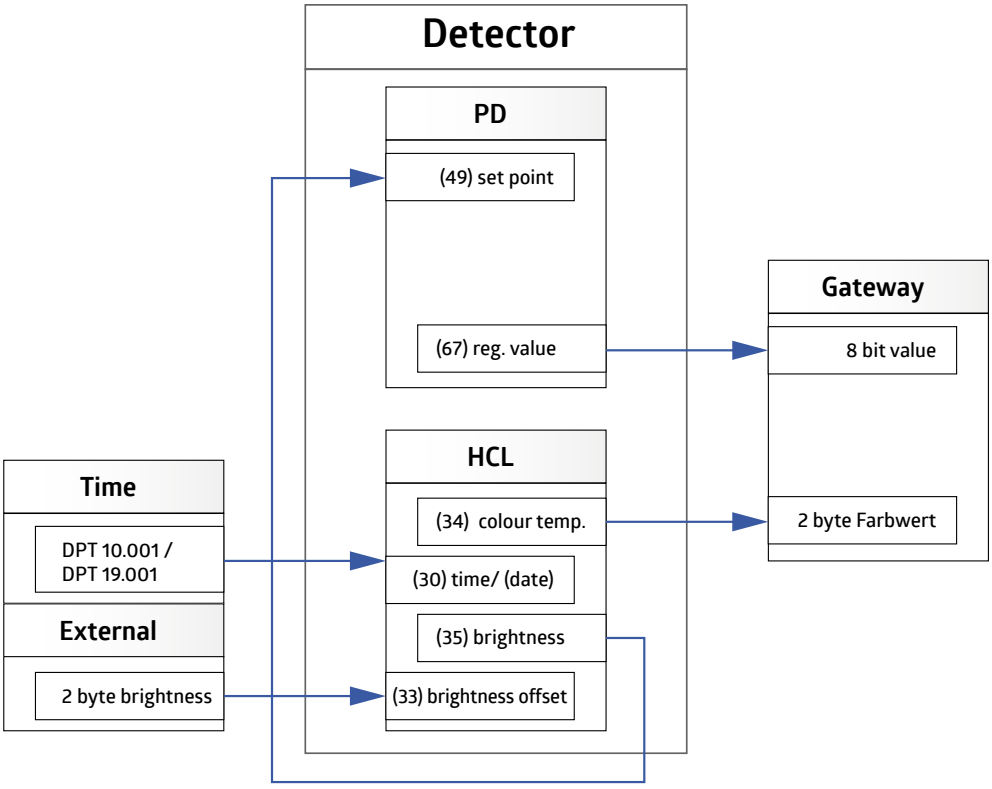

5.4.1.4 Scene function (HCL: configuration)

A total of four scenes are available, with three scenes (Scene 2-4) offering the option of defining fixed colour temperature and brightness values, for example for events or examination situations at school. If scene 1 is selected, the current time in the curve is used.

HCL: Configuration > Scene function	
Scene 2-4 Colour temperature in K	1000 ... 12000 **(3500)**
Scene 2-4 Brightness in Lux	5 ... 2000 **(500)**

No.	Name	Function	C	R	W	T	M
31	HCL: Input (DPT 17.001)	Scene	X	–	X	–	–

5.4.1.5 Locking function (HCL: configuration)

After activating the locking function, the lighting can be switched on optionally with a fixed colour and brightness value.

HCL: Configuration > Locking function	
Locking function	**deactivated**
	activated

The locking can be realised via a “1” or “0” telegram. The respective inverted telegram cancels the lock again.

HCL: Configuration > Locking function	
Lock with	**1**
	0

It can be selected whether the colour temperature and / or the brightness should be sent when the lock is activated.

HCL: Configuration > Locking function	
Send colour temperature upon activation of locking function	deactivated
	activated

HCL: Configuration > Locking function	
Colour temperature in K (only visible with colour temperature send activated)	1000 ... 12000 **(3500)**

HCL: Configuration > Locking function	
Send brightness upon activation of locking function	deactivated
	activated

HCL: Configuration > Locking function	
Brightness in Lux (only visible with Send brightness activated)	5 ... 2000 **(500)**

No.	Name	Function	C	R	W	T	M
32	HCL: Input (DPT 1.001)	Lock	X	–	X	–	–

5.4.2 Logic

The devices of the DX variant have logic functions that are divided into two identical modules. Three inputs and one output are available per module, whereby the third input on the card "L(x): Logic Configuration" card must be activated separately.

In addition to the object type, you can select whether the logic input is "0" or "1" if the selected object type is ≥ or ≤ a certain value. This depends on the selected object type.

The send condition of the output can be defined as well as the behaviour after bus voltage return.

Since logic modules 1 and 2 are identical, the function for L1 / L2 is explained together.

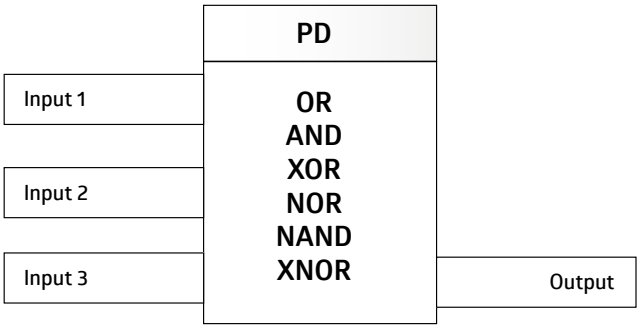

Further configuration: > Logic	
L1 / L2	**deactivated**
	activated

When the function is activated, the following parameters can be set on the card „L(x): Logic configuration":

5.4.2.1 Settings (L(x): Logic Configuration)

The logic gate to be used to link the inputs to the output can be selected here.

L(x): Logic Configuration > Settings	
Logic gate	**OR**
	AND
	XOR
	NOR
	NAND
	XNOR

5.4.2.2 Input 1-3 (L(x): Logic configuration)

Since inputs 1-3 are identically structured, the function for the inputs is explained together. However, the third input must be activated separately so that the parameters become visible.

First, the state of the logic input (1 or 0) after bus voltage return can be defined.

L(x): Logic configuration > Input 1-3	
Logic input after bus voltage return	1
	0

Different data point types are available for selection in the object types. Each input can be provided with the corresponding data point type depending on the application.

L(x): Logic configuration > Input 1-3	
Object type	**1 bit (DPT 1.001)**
	1 byte percent DPT 5.001)
	1 byte counter DPT 5.010)
	1 byte counter with prefix DPT 6.010)
	2 byte float (DPT 9.x)
	2 byte counter (DPT 7.x)
	2-byte counter with prefix (DPT 8.x)
	4 byte float (DPT 14.x)
	4 byte counter (DPT 12.x)
	4-byte counter with prefix (DPT 13.x)

The conditions for the individual inputs can be defined via comparators. Here, depending on the selected data point type, the values for the logical state “1” or “0” can be set.

L(x): Logic configuration > Input 1-3	
Logic input is “0” for	**Smaller - equal**
	greater - equal

L(x): Logic configuration > Input 1-3	
Logic input is “1” for	Smaller - equal
	greater - equal

L(x): Logic configuration > Input 1-3		
Values at “0”	1Bit (DPT 1.001)	0 ... 1 **(0)**
	1 byte percent DPT 5.001)	0 ... 100 **(20)**
	1 byte counter DPT 5.010)	0 ... 255 **(30)**
	1 byte counter with prefix DPT 6.010)	-128 ... 127 **(-80)**
	2 byte float (DPT 9.x) (no decimal place)	-671088 ... 670760 **(100)**
	2 byte counter (DPT 7.x)	0 ... 65535 **(100)**
	2-byte counter with prefix (DPT 8.x)	-32768 ... 32767 **(100)**
	4 byte float (DPT 14.x) (no decimal place)	-2147483647 ... 2147483646 **(100)**
	4 byte counter (DPT 12.x)	0 ... 2147483646 **(100)**
	4-byte counter with prefix (DPT 13.x) (no decimal place)	-2147483647 ... 2147483646 **(100)**

L(x): Logic configuration > Input 1-3		
Values at “”	1Bit (DPT 1.001)	0 ... 1 **(1)**
	1 byte percent DPT 5.001)	0 ... 100 **(80)**
	1 byte counter DPT 5.010)	0 ... 255 **(220)**
	1 byte counter with prefix DPT 6.010)	-128 ... 127 **(80)**
	2 byte float (DPT 9.x) (no decimal place)	-671088 ... 670760 **(500)**
	2 byte counter (DPT 7.x)	0 ... 65535 **(500)**
	2-byte counter with prefix (DPT 8.x)	-32768 ... 32767 **(500)**
	4 byte float (DPT 14.x) (no decimal place)	-2147483647 ... 2147483646 **(500)**
	4 byte counter (DPT 12.x)	0 ... 2147483646 **(500)**
	4-byte counter with prefix (DPT 13.x) (no decimal place)	-2147483647 ... 2147483646 **(500)**

5.4.2.3 Output (L(x): Logic configuration)

When configuring the output, it can first be set when the output sends the result of the logic gate. It is possible to set this for every modification, for a modification from "0" to "1" or from "1" to "0". With the setting "upon input update", the output sends the status even if the same value is sent again at the input.

L(x): Logic Configuration > Output	
Send	**upon modification**
	upon modification from "0" to "1
	upon modification from "1" to "0
	upon input update

It can be defined whether the output is allowed to send the result upon bus voltage return or not.

L(x): Logic Configuration > Output	
Send upon bus voltage return	deactivated
	activated

With the object types, different data point types can also be selected here. The output can be provided with the corresponding data point type depending on the application.

L(x): Logic Configuration > Output	
Object type	**1Bit (DPT 1.001)**
	1 byte percent DPT 5.001)
	1 byte counter DPT 5.010)
	1 byte counter with prefix DPT 6.010)
	2 byte float (DPT 9.x)
	2 byte counter (DPT 7.x)
	2-byte counter with prefix (DPT 8.x)
	4 byte float (DPT 14.x)
	4 byte counter (DPT 12.x)
	4-byte counter with prefix (DPT 13.x)

The conditions for the output can also be defined. Depending on the selected data point type, the values for the logical state "1" or "0" can be set.

L(x): Logic Configuration > Output		
Values at "0"	1Bit (DPT 1.001)	0 ... 1 **(0)**
	1 byte percent DPT 5.001)	0 ... 100 **(0)**
	1 byte counter DPT 5.010)	0 ... 255 **(0)**
	1 byte counter with prefix DPT 6.010)	-128 ... 127 **(-128)**
	2 byte float (DPT 9.x) (no decimal place)	-671088 ... 670760 **(0)**
	2 byte counter (DPT 7.x)	0 ... 65535 **(0)**
	2-byte counter with prefix (DPT 8.x)	-32768 ... 32767 **(-1000)**
	4 byte float (DPT 14.x) (no decimal place)	-2147483647 ... 2147483646 **(0)**
	4 byte counter (DPT 12.x)	0 ... 2147483646 **(0)**
	4-byte counter with prefix (DPT 13.x) (no decimal place)	-2147483647 ... 2147483646 **(0)**

L(x): Logic Configuration > Output		
Values at ""	1Bit (DPT 1.001)	0 ... 1 **(1)**
	1 byte percent DPT 5.001)	0 ... 100 **(100)**
	1 byte counter DPT 5.010)	0 ... 255 **(255)**
	1 byte counter with prefix DPT 6.010)	-128 ... 127 **(127)**
	2 byte float (DPT 9.x) (no decimal place)	-671088 ... 670760 **(1000)**
	2 byte counter (DPT 7.x)	0 ... 65535 **(1000)**
	2-byte counter with prefix (DPT 8.x)	-32768 ... 32767 **(1000)**
	4 byte float (DPT 14.x) (no decimal place)	-2147483647 ... 2147483646 **(1000)**
	4 byte counter (DPT 12.x)	0 ... 2147483646 **(1000)**
	4-byte counter with prefix (DPT 13.x) (no decimal place)	-2147483647 ... 2147483646 **(1000)**

No.	Name	Function	C	R	W	T	M
157	L1: Input (depending on DPT)	Input 1	X	–	X	–	–
158	L1: Input (depending on DPT)	Input 2	X	–	X	–	–
159	L1: Input (depending on DPT)	Input 3	X	–	X	–	–
160	L1: Output (depending on DPT)	Output	X	–	–	X	–
161	L2: Input (depending on DPT)	Input 1	X	–	X	–	–
162	L2: Input (depending on DPT)	Input 2	X	–	X	–	–
163	L2: Input (depending on DPT)	Input 3	X	–	X	–	–
164	L2: Output (depending on DPT)	Output	X	–	–	X	–

5.4.3 Simulation

In presence simulation, the detector switches the lighting on channel L0 on and off randomly.

If the function is activated, a new card appears on the left side.

Further configuration: > Simulation	
SIMU	**deactivated**
	activated

The following parameters can be set on the "SIMU: Logic Configuration" card that is visible when the function is activated:

5.4.3.1 Settings (SIMU: Configuration)

If the brightness falls below the defined brightness set value or switch-on threshold, the simulation starts when the function is activated. The simulation duration can be set.

Due to different occupancy in the different rooms, a minimum switch-on and switch-off time can be specified. In addition, it is necessary to set a generated random time to set the limits of the intervals.

If, for example, a minimum switch-on time of 10 minutes and a generated random time of 20 minutes is selected, the lighting remains switched on for a minimum of 10 minutes and a maximum of 30 minutes. The same principle applies to the switch-off time.

In rooms with a lot of presence, the switch-on time tends to be long and the switch-off time short, whereas in corridors and social rooms the switch-off time is longer.

After the set simulation time has elapsed, the simulation ends dynamically due to the random times and automatically restarts in the morning from a brightness of 100 lux until the set switch-on threshold is exceeded. When dusk falls, the simulation is restarted.

When entering the area for which presence simulation is active, the simulation is overridden by the detected movement and the lighting is switched or controlled according to the settings for existing presence. Push-buttons can also be used. After the person has left the area again, the simulation is continued after the set follow-up time has elapsed.

SIMU: Configuration > Settings	
Simulation time in hours	1 ... 24 **(5)**

SIMU: Configuration > Settings	
Minimum switch-on time in minutes	1 ... 255 **(10)**

SIMU: Configuration > Settings	
Additional automatically generated random switch-on time in minutes (max)	1 ... 255 **(20)**

SIMU: Configuration > Settings	
Minimum switch-off time in minutes	1 ... 255 **(10)**

SIMU: Configuration > Settings	
Additional automatically generated random time up to a maximum of in minutes (max)	1 ... 255 **(20)**

The function is only active in the "Switching" operating mode if the "Brightness-dependent switching" parameter is activated!

Presence simulation is activated and deactivated by addressing group object 165 "SIMU: Input" and / or remote control.

SIMU: Configuration > Settings	
Presence simulation start / stop	**via group object**
	via remote control
	via group object and remote control

No.	Name	Function	C	R	W	T	M
165	SIMU: Input (DPT 1.010)	Simulation start/stop	X	–	X	–	–

5.4.4 Temperature measurement

Some detectors have a built-in temperature sensor. Therefore, the device variant according to the overview table must be observed.

The temperature at the ceiling is different from the temperature at the workplace. This difference can be compensated by a correction value. The correction value is determined by measuring the temperature at the ceiling and at the workplace.

The following factors can worsen the temperature measurement:

- Air circulates frequently in suspended ceilings. Draughts can occur, for example, when a door is opened. Partition walls between offices are not tight, for example, so that air circulates in the suspended ceiling.

- Flat roofs heat up due to solar radiation. The space between the roof and the suspended ceiling has a higher temperature than the space below the suspended ceiling. Since the detector hangs right in between, a draught can occur here.
- Heating can take place due to LEDs integrated in the detector.

The temperature can be sent to the bus when it changes. The value from which the change is sent can be selected. The value can also be sent cyclically. The cycle time can be selected between 1 second and 1 hour.

Further configuration > Temperature measurement	
Temperature measurement	**deactivated**
	upon modification
	cyclically
	upon modification and cyclically

Further configuration > Temperature measurement	
Correction value in 0.1K	-128 ... 127 **(0)**

Further configuration > Temperature measurement	
Cycle time (only visible with activation "cyclic" and "upon modification and cyclic")	00:01...60:00 mm:ss **(00:05)**

Further configuration > Temperature measurement	
Modification in 0.1K (only visible with activation "Change" and "upon modification and cyclically")	1... 10 **(5)**

No.	Name	Function	C	R	W	T	M
12	Temperature measurement: Output (DPT 9.001)	Temperature	X	-	-	X	-

5.4.5 Remote control

Three optional remote controls are available. These are the B.E.G. standard KNX remote control for configuring the detectors (27 buttons), the bidirectional smartphone app B. E. G. One and, for the DX variant, a 5-button remote control for the end customer.

ATTENTION	
⚠	All settings made with the remote control are not visible in the ETS!

ATTENTION	
⚠	The 27-button and the 5-button remote control can only be used **alternatively**. The parameters for enabling the IR channels for the 5-button remote control also appear when the 27-button remote control is selected. In this case, the parameters have no function and should all be set to the “deactivated” setting.

ATTENTION	
⚠	Changing the values using the app or remote control is only possible if this is enabled in the ETS parameters.

5.4.5.1 Overview of remote-control functions

B.E.G. LUXOMAT® IR-PD-KNX		Not programmed		Normal mode		Slave mode		Test mode		Locked	
		lock	unlock	lock	unlock	lock	unlock	lock	unlock	lock	unlock
Set value/threshold 1.000 Lux	1000 Lux				✓				✓		
Set value/threshold 500 Lux	500 Lux				✓				✓		
Set value/threshold 200 Lux	200 Lux				✓				✓		
Set value/threshold 100 Lux	100 Lux				✓				✓		
Read current light value					✓						
Set value/threshold 20 Lux	20 Lux				✓				✓		
Switch on burn-in function	100 h on				✓				✓		
Switch off burn-in function	100 h off				✓				✓		
Dim up	max ▲				✓						
Dim down	min ▼				✓						
Follow-up time 1 min	1 min				✓				✓		
Follow-up time 5 min	5 min				✓				✓		
Follow-up time 10 min	10 min				✓				✓		
Follow-up time 15 min	15 min				✓				✓		
Follow-up time 30 min	30 min				✓				✓		
Follow-up time 60 min	60 min				✓				✓		
Light on					✓				✓		
Light off					✓				✓		
Switch on corridor function	Corr ON				✓				✓		
Switch off corridor function	Corr OFF				✓				✓		
Switch on LED	LED on				✓		✓		✓		
Switch off LED	LED off				✓		✓		✓		
KNX programming button	Prog.		✓		✓		✓		✓		
Test mode on/off	TEST				✓				✓		
Reset	RESET		✓		✓		✓		✓		

5.4.5.2 Remote control (27 buttons) for configuration (art. no. 92123)

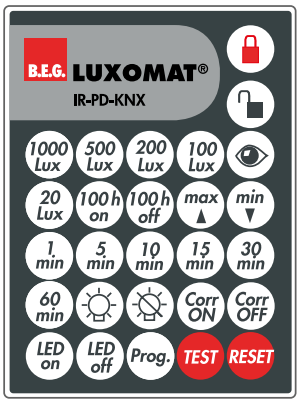

The type of remote control must be set to 27-key (configuration).

In any operating state (except when the detector is locked), the detector can be locked or unlocked with the remote control. In the locked state, only TEST and RESET are available.

The “TEST” button is used to check the detection range. If a movement is detected, the lighting switches on for 2 seconds and then off again. The duration until the next switch-on depends on the set length of the safety delay.

The “RESET” button resets the detector. The detector behaves in the same way as when the bus voltage returns. The parameters set there are taken into account.

Press the “Prog.” button to set the detector in the open state to the programming state in order to programme a physical KNX address.

(This function is also available for the initial commissioning, i.e., if the 5-button remote control was selected in the ETS).

5.4.5.3 Remote control (5 buttons) for end customers (art. no. 93398)

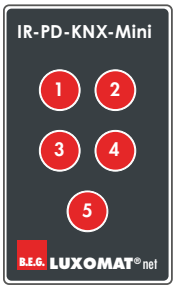

In the DX variant and in Aleum Glow, a mini remote control is available for the end customer, which can be programmed according to the end customer’s wishes and can also be used for remote control of other actuators present in the system. Since the information is stored in the detector and the remote control only sends one infrared command per button, a different programming of the remote control can be stored in each detector.

If the 5-button remote control is selected for the type of remote control, the individual buttons “IR1” to “IR5” can be activated or deactivated on the “Button configuration” card. When a button is activated, a new card with the corresponding IR channel (IR1 ... IR5) appears on the left side. The numbers of the group objects depend on the IR channel. An operation mode can be assigned to each button: Switching, dimming, blind/shutter, scene.

5.4.5.4 B.E.G. One App

B.E.G. offers the option of using a free app (Android and iOS) to read out the detectors or make settings that go beyond the functions of the configuration remote control (27 buttons).

The app can be downloaded via the following QR code.

This can be activated in the app. The BLE/IR adapter (93067) is used to establish a connection to the detector.

On the start screen, “Configure Device” 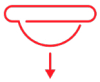 takes you to another page where you can either search for a device or read out the device directly. This gives you all the data of the device and you can change values and send them back to the device.

The app has help texts for all settings.

For more information on the B. E. G. One app, please visit our landing page.

The following options, whose explanation can be found in the respective chapters on the corresponding ETS parameters, are available via the app:

Software version

The current software version of the detector is displayed here so that it can be specified in the event of any questions to the support team.

IR PIN

If the detector is accessed via the app, the PIN set in the remote-control parameters in the ETS must be entered first. Otherwise, there is only the option of reading out the parameters. Settings can only be made when the correct PIN is entered and the corresponding parameters are enabled.

Physical address

The physical address of the detector can be displayed. This allows the customer to identify the detector in the ETS without having to remove it.

Current brightness value

The detector can output the currently measured brightness value taking into account the reflection factors. This can be sent to the bus, but can also be displayed via the app. This makes it possible to use the displayed value for the light measurement parameters.

Sensitivity of the sound sensor

If this parameter is enabled in the ETS, the sensitivity can be read out or changed via the app, whereby “10” is the maximum sensitivity. At “0”, the sound sensor is deactivated.

Automatic threshold adjustment

The sound sensor can not only be adjusted in sensitivity. A filter can also be used to filter out constant noise so that the detector ignores background noise, for example.

Status motion / IR / sound sensor LED

The status of the motion LED and the sound sensor LED can also be read out. If the parameters are enabled accordingly in the basic settings, they can also be switched on or off via the app.

Prog.

Programming mode on/off

The programming mode for the physical address of the detector can be activated via the app. Thus, it is not necessary to press the programming button on the device.

Test mode start/stop

The test mode can be activated or deactivated.

Restart

The detector is reset and restarts.

Parameter light output (LO)

The following parameters are available in the app for the light output (LO):

On/Off

The light output (LO) can be switched on or off using the buttons. The behaviour of the detector depends on the settings on the “Manual switch-on” card.

Brighter/Darker

If the channel is working in regulation mode, the lighting can be dimmed.

The size of the dimming steps via the remote control can be set on the “Remote control” card.

Locking function start/stop

The channel can be locked or unlocked using the buttons. The behaviour depends on the settings of the “Lock” card.

Operation mode

During operation, it is possible to change the operation mode between full automatic and semi-automatic.

Projector/Corridor

It is possible to switch between projector and corridor function.

Follow-up time

The follow-up time of the light output can be set here.

Set value / switch-on threshold

Depending on the operation mode, the switch-on threshold can be set in switching mode and the set value in regulation mode.

Save brightness

The current light value can be read in via the eye button. If the value falls below this stored value, the detector switches on.

Sensitivity of the individual sensors

For detectors with multiple motion sensors, the sensitivity of the individual sensors can be adjusted.

Sound sensor

The sound sensor can be activated or deactivated.

100 h

Burn-in function start/stop

The burn-in function can be started or stopped. The behaviour depends on the “Burn-in function” settings.

The remaining burn-in time can be displayed in the app.

Presence simulation start/stop

The presence simulation can be started or stopped using the buttons.

Parameters HVAC channels

The following parameters are available in the app for the HVAC channels (HVAC1 - HVAC3). Since all HVAC channels are identical, the following parameters are explained only once.

On/Off

The HVAC channels (HVAC1-HVAC3) can each be switched on or off using the buttons. The behaviour of the detector depends on the settings on the “Manual switch-on” card.

Locking function start/stop

The channel can be locked or unlocked using the buttons. The behaviour depends on the settings of the “Lock” card.

Mode

Operating mode

During operation, it is possible to change the operating mode between fully automatic and semi-automatic.

Follow-up time

The follow-up time of the light output A1 can be set.

Switch-on threshold

In the “Switching” operating mode, the switch-on threshold can be set.

Sensitivity of the individual sensors

For detectors with multiple motion sensors, the sensitivity of the individual sensors can be adjusted.

Sound sensor

The sound sensor can be activated or deactivated.

Parameter slave output

The following parameters are available in the app for the slave output (SL):

Sensitivity of the individual sensors

For detectors with multiple motion sensors, the sensitivity of the individual sensors can be adjusted.

Sound sensor

The sound sensor can be activated or deactivated.

Parameter colour control orientation and night light LED

This parameter is exclusively for the outdoor detector RC-plus next N 230 (art. no. 93527 or 93528).
This has an LED behind the lens of the anti-creep zone below the device to illuminate a house number or similar.
On the Aleum (item no. 93584 or 93585), the ambient lighting can be adjusted.

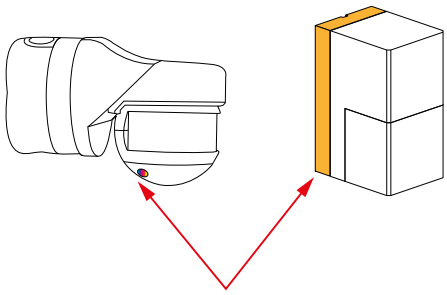

Colour control orientation and night light LED

The colour can be adjusted by means of a slider. The setting is made via three sliders (RGB).

Parameter light measurement

The light values of the following parameters are needed to adjust the light measurement (reflection factor):

Artificial light Measured value Ceiling

The light value of the artificial light measured at the detector's mounting location is output here. This value is needed to calculate the reflection factor from it and from the value measured on the work surface. For this purpose, the room should be darkened so that the pure artificial light component can be measured.

Artificial light Measured value desk

If the default settings are not suitable, the measured value can be entered on the table both via ETS and with the app. For this purpose, the room should be darkened so that the pure artificial light component can be measured. Using this value and the measured value under the ceiling, the detector calculates the reflection factor in the room. In addition, the measurement should be repeated without artificial light with the blinds open.

Daylight Measured value ceiling

The light value of the daylight measured at the detector's mounting location is output here. This value is needed to calculate the reflection factor together with the value measured on the work surface. For this purpose, the artificial light should be switched off so that the pure daylight component can be measured when the room is not darkened.

Daylight Measured value desk

The light value measured on the work surface with the lighting switched off and the room not darkened can be entered here.

The calculation of the light value in the room is carried out automatically by the detector, taking into account the values entered.

Learning phase start/stop

The 24-hour learning phase for determining the reflection factor can be activated or deactivated here.

5.4.5.5 Parameters

	ATTENTION
⚠	The 27-button and the 5-button remote control can only be used **alternatively**. The parameters for enabling the IR channels for the 5-button remote control ("Button configuration" card) also appear when the 27-button remote control is selected. In this case, the parameters have no function and should all be set to the "deactivated" setting.

Further configuration > Remote control	
Remote control type	**5 buttons or deactivated**
	27 buttons (for configuration)

The parameter "Dimming step via remote control" determines the change that can be made by pressing a button.

Further configuration > Remote control	
Dimming step via remote control in %	100
	50
	25
	12
	6
	3
	1,5

IR PIN

When using the B.E.G. One app, the detector can be secured with a PIN to protect it against unwanted setting. For this purpose, a four-digit identification number (0 - 9999) can be defined under the IR PIN parameter, whereby no PIN is used for "0".

Optionally, this PIN can be overwritten via ETS download or not.

Each device can also be read out without entering the PIN. However, if a parameter is to be changed, the PIN must be entered.

Further configuration > Remote control	
IR PIN through ETS download	**overwritable**
	not overwritable

Further configuration > Remote control	
IR PIN (0 = no PIN)	-0 ... 9999 **(0)**

5.4.6 Sound sensor

Some detectors include a built-in sound sensor. The sound sensor is used for noise detection and is used in rooms that are not fully visible to the detector, for example in washrooms with individual cubicles. Depending on the setting, noise detection is only activated after the detector has detected movement by means of a passive infrared sensor. The sound sensor is then active and the follow-up time of the detector is restarted according to the motion and noise detection.

	ATTENTION
⚠	Further setting options for the sound sensor can be found on the cards for the light output, the three HVAC channels and the slave channel. These are described in the chapter "LO: Detector configuration".

It can be selected whether the LED (red) for the sound sensor indicates the detection of a sound (activated) or not (de-activated).

Further configuration > Sound sensor	
Sound sensor LED	deactivated
	activated

It can also be parameterised for this LED that it can be deactivated during operation, by means of a group object or via the bidirectional smartphone app.

Further configuration > Sound sensor	
Activation modifiable	**deactivated**
	via group object
	Via remote control
	via group object and remote control

Further configuration > Sound sensor	
Modified activation through ETS download (only visible when "modification via remote control" is selected)	**overwritable**
	not overwritable

Depending on the parameterisation in the ETS, the sensitivity can be adjusted by means of a potentiometer on the detector or via the bidirectional smartphone app. If the smartphone app is used, a default value for the sensitivity (start value) can be set in the ETS. A sensitivity changed via the smartphone app can be overwritten by a new ETS download (parameterisable).

Further configuration > Sound sensor	
Sensitivity of the sound sensor	**modification via potentiometer**
	modification via remote control

Further configuration > Sound sensor	
Modified sensitivity through ETS download (only visible when "modification via remote control" is selected)	**overwritable**
	not overwritable

This overwrites the ETS programming.

Automatic threshold adjustment can be used to filter out constant background noise.

Further configuration > Sound sensor	
Automatic threshold adjustment	**deactivated**
	activated

If the automatic threshold adjustment is deactivated, a duration for determining the trigger threshold can be defined to filter out background noise.

Further configuration > Sound sensor	
Observation time to determine the trigger level in minutes	1 ... 255 **(5)**

No.	Name	Function	C	R	W	T	M
4	General: Input (DPT 1.001)	Activation LED sound sensor	X	–	X	–	–

5.4.7 Motion/IR LED

The motion/IR LED of the detector indicates when the detector has detected a movement. The reception of an IR signal from the remote control or the app is also indicated by the LED flashing. The LED function can be optionally deactivated.

Further configuration > Motion / IR LED	
Motion / IR LED	deactivated
	activated

Further configuration > Motion / IR LED	
Activation modifiable	**deactivated**
	via group object
	via remote control
	via group object and remote control

The setting via group object and / or remote control can optionally be overwritten with the ETS.

Further configuration > Motion / IR LED	
Modified activation by ETS download	**overwritable**
	not overwritable

No.	Name	Function	C	R	W	T	M
3	General: Input (DPT 1.001)	Activation LED motion/IR	X	–	X	–	–

5.4.8 Test mode

The test mode is used to check the detection range. If a movement is detected, the lighting switches on for 2 seconds and then off again. The duration until the next switch-on depends on the set length of the safety delay (see LO: Detector configuration).

Further configuration > Test mode	
Activation modifiable	**deactivated**
	via group object
	Via remote control
	via group object and remote control

No.	Name	Function	C	R	W	T	M
1	General: Input (DPT 1.001)	Test mode	X	-	X	-	-

5.4.9 Ambient light

Ambient light is only available on the Aleum. This function allows the light ring to be controlled continuously in RGB mode via the communication object. The communication object overrides the parallel operation of the orientation light or night light. If the controlled RGB value is 0,0,0, the orientation light or night light becomes active again.

Further configuration > Ambient light	
Control ambient lighting via a communication device	**deactivated**
	activated

No.	Name	Function	C	R	W	T	M
5	Input (DPT232.600)	RGB ambient lighting	X	-	X	-	-

5.4.10 Start delay

When the KNX bus is switched on (bus voltage return), all devices connected to a line are immediately ready for operation. If there are many sensors in a line that want to send initialisation or start telegrams, the telegram load may be too high when the bus voltage returns and telegrams may be lost.

This switch-on behaviour can be equalised by the start delay. The detector only sends its first telegrams after the start delay has elapsed.

Within a line, start delays of different lengths should be parameterised for the sensors/detectors.

Further configuration > Start delay	
Start delay	0 ... 255 **(0)**

5.4.11 Telegram repetitions

In radio links, it can happen that signals are lost. To minimise this risk, various information can be sent repeatedly. Two blocks are available for telegram repetitions.

Further configuration > Telegram repetitions	
First repetition block	**activated**
	deactivated
Distance to previous transmission requests in ss.fff [seconds.milliseconds]	00.500 – 04.999 **(01.000)**
Distance in block in ss.fff [seconds.milliseconds]	00.100 – 05.000 **(05.000)**
Detectors use repetition block	deactivated
	activated
Push-buttons use repetition block (not changeable)	**deactivated**
HCL uses repetition block	**deactivated**
	activated
Logic uses repetition block	**deactivated**
	activated
Use temperature and brightness value Repetition block	**deactivated**
	activated

Second repetition block	**activated**
	deactivated
Distance to previous transmission requests in ss.fff [seconds.milliseconds]	05.000 – 20.000 **(05.000)**
Distance in block in ss.fff [seconds.milliseconds]	00.100 – 05.000 **(05.000)**
Detectors use repetition block	deactivated
	activated
Push-buttons use repetition block (not changeable)	**deactivated**
HCL uses repetition block	**deactivated**
	activated
Logic uses repetition block	**deactivated**
	activated
Use temperature and brightness value Repetition block	**deactivated**
	activated

5.4.12 Retransmitter function (repeater function)

To amplify radio signals or to bridge longer radio distances, the retransmitter function can be activated in the ETS. The function can be found in the properties of the device > Settings, below the safe commissioning. To activate it, the check-box must be ticked.

5.5 LO: Detector configuration

The parameters for the setting "movement-dependent operation" (switching or regulation mode) are described. If a new card is visible when a parameter is activated or changed, this is also described after the chapter.

5.5.1 Card "motion-dependent switching mode" or "motion-dependent regulation mode"

5.5.1.1 Operation mode of the detector

On the "motion-dependent regulation mode" or "motion-dependent switching mode" card, you can first decide whether the device is to operate in full or semi-automatic mode.

Full automatic operation

In this operating state, the lighting switches on and off automatically for increased comfort, depending on presence and brightness.

Semi-automatic mode

In this operation mode, the lighting only switches on after manual switch-on for increased savings success. Switching off takes place automatically or manually. After the follow-up time has expired, the lighting can be switched on again automatically by movement within the period defined as a waiting period. After this period has elapsed, pressing the push-button again is required to switch on the lighting.

LO: Detector configuration	
Operation mode of the detector	**Full automatic mode**
	Semi-automatic mode

The following parameters can be set on the "Full automatic" or "Semi-automatic" card that is visible depending on the option selected:

The operating mode can be changed without ETS. Depending on the setting on the "Full automatic" or "Semi-automatic" card, this can be done via group object and / or remote control.

LO: Detector Configuration > Full/Semi-automatic	
Operation mode changeable	**deactivated**
	via group object
	via remote control
	via group object and remote control

The setting via group object and / or remote control can optionally be overwritten with the ETS.

LO: Detector Configuration > Full/Semi-automatic	
Changed operation mode by ETS download	**overwritable**
	not overwritable

If a 1-telegram is sent to the group object, the detector operates in full automatic mode; if a 0-telegram is sent, it operates in semi-automatic mode.

No.	Name	Function	C	R	W	T	M
54	LO: Input (DPT 1.002)	Change operation mode FA = (1) SA = (0)	X	-	X	-	-

5.5.1.2 External influences

By means of the objects 45 “Input - External Switching”, 46 “Input - External Dimming” and 47 “Input - External Value” that can be activated on this card, an actuator can be directly influenced while bypassing the detector, whereby the detector is informed about the direct influence on the actuator. This suspends the control by the detector, but motion detection and follow-up time continue to be monitored and taken into account by the detector. The state effected via objects 45, 46 and 47 is thus maintained as long as the detector detects movement plus the set follow-up time.

If automatic mode is to be reactivated before the follow-up time has elapsed, a 0 and a 1 telegram can be sent via group object 44 “Input - Manual influence” by briefly pressing the button and the control can be reactivated via the detector.

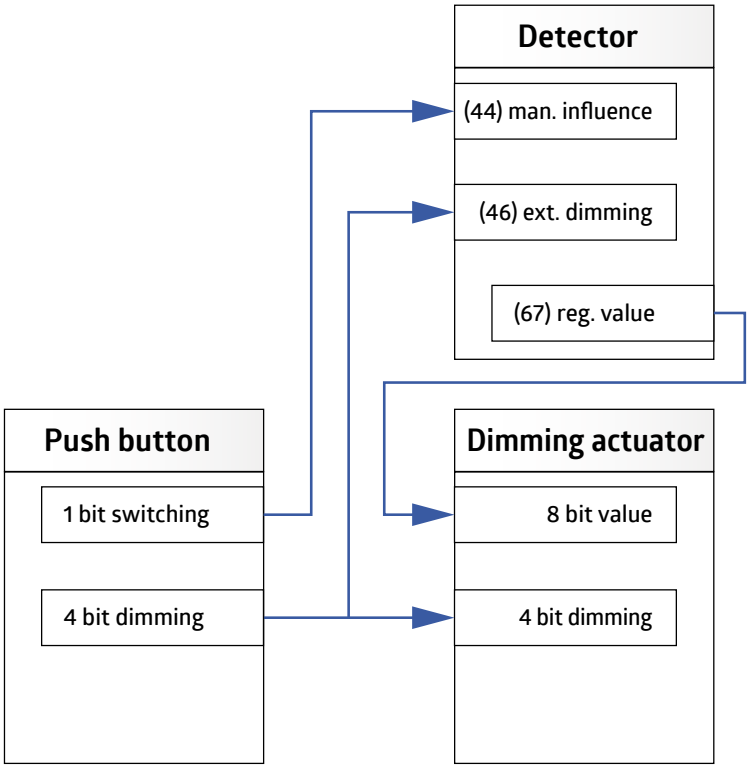

Figure 1

This applies to both switching and regulation mode.

With the “Soft start” setting, the 4-bit object of the push-button must be linked with a separate group address to the input object of the detector for manual dimming (without the 4-bit object 51 of the detector, see Fig. 2).

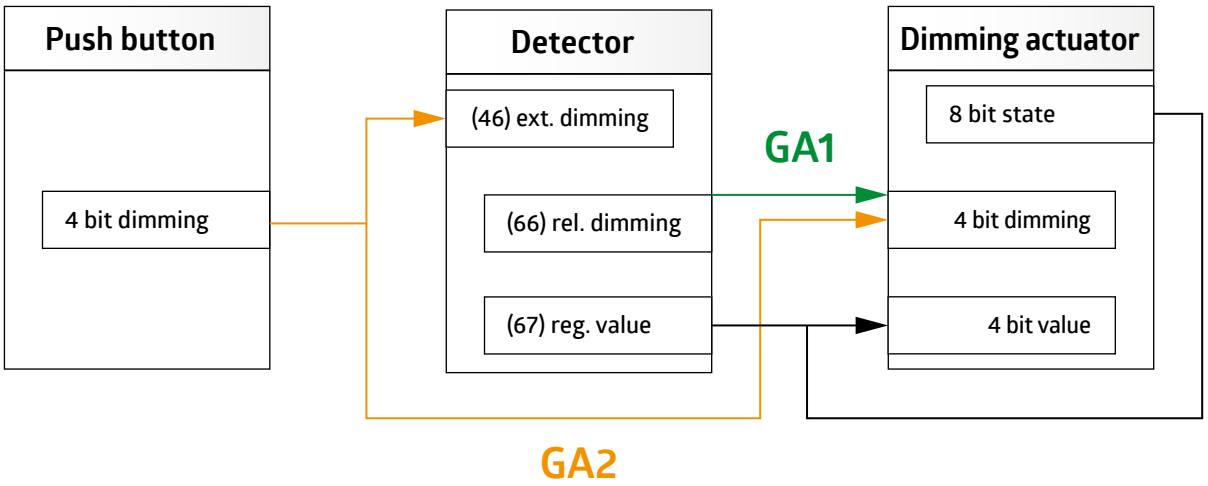

Figure 2

LO: Detector configuration > motion-dependent switching/control mode	
External influences	**deactivated**
	activated

No.	Name	Function	C	R	W	T	M
45	LO: Input (DPT 1.001)	External switching	X	-	X	-	-
46	LO: Input (DPT 3.007)	External dimming	X	-	X	-	-
47	LO: Input (DPT 5.001)	External value	X	-	X	-	-

5.5.1.3 Manual switch-on with sufficient ambient light

When activated, the lighting can be switched on with the help of the push-button even though the brightness threshold has been exceeded and the detector does not normally switch on the lighting. If this parameter is deactivated, the lighting can only be switched on manually if the measured luminosity is below the brightness threshold.

When the parameter is activated, a “manual switching” card appears on the left.

LO: Detector configuration > motion-dependent switching/regulation mode	
Manual switch-on with sufficient ambient brightness	**activated**
	deactivated

The following parameters can be set on the “Manual switch-on” card that is visible when the function is activated:

A forced switch-off can be activated on the “Manual switch-on” card. If it is activated, another parameter “Forced switch-off after (x) minutes” becomes visible. The forced switch-off ensures that the lighting switches off after the defined time despite manual switch-on when the brightness threshold is exceeded, provided the brightness value is still above the brightness threshold.

LO: Detector Configuration > Manual Power On	
Forced switch-off after manual switch-on with sufficient ambient light	**activated**
	deactivated

LO: Detector Configuration > Manual Power On	
Forced switch-off after minutes (only visible with activation “Forced switch-off after manual switch-on with sufficient brightness”)	1...255 **(15)**

5.5.1.4 State or function after manual switch-off or end of follow-up time

Three options are available for this parameter:

LO: Detector configuration	
Status or function upon manual switch-off or end of follow-up time	inactive
	switch-off pre-warning
	projector/corridor

Inactive

The lighting is switched off and the follow-up time is stopped and reset. At the next detected movement, the detector switches the lighting on again.

If the function "Switch-off pre-warning" is selected, the following parameters can be set on the "Switch-off pre-warning" card:

5.5.1.4.1 Switch-off pre-warning (switching mode)

If this parameter is activated, the time of the pre-warning can be determined on the "Switch-off pre-warning" card. The pre-warnings are for example important in staircases. The lighting is briefly switched off and on again before the follow-up time expires. This function applies both when switching off manually and after the follow-up time has ended. Thus, the person is warned that the lighting will be switched off shortly if there is no movement or a push-button is pressed. In switching mode, it is possible to determine the number of pre-warnings and at what time before the final switch-off the pre-warning(s) should be triggered.

LO: Detector Configuration > Switch-off pre-warning	
Number of pre-warnings (only visible when switch-off prewarning is activated (switching operation))	1...3 **(3)**

LO: Detector Configuration > Switch-off pre-warning	
Pre-warning at seconds before switch-off (only visible when switch-off early warning is activated)	1...255 **(30)**

5.5.1.4.2 Switch-off pre-warning (regulation mode)

In regulation mode, the detector first switches the lighting to 40 % and then slowly moves down to 10 %. After the set duration, the lighting switches off completely.

LO: Detector Configuration > Switch-off pre-warning	
Pre-warning at seconds before switch-off (only visible when switch-off early warning is activated)	1...255 **(30)**

5.5.1.4.3 Projector/Corridor (Manual Off)

The two functions differ as follows:

With the **corridor function**, the lighting remains off for a definable short duration after being switched off manually, even if movement is detected, so that the room can be left. The function is primarily suitable for corridors and staircases.

If the parameter is selected, the card “Projector / Corridor” appears on the left side. The corresponding function can then be selected here.

If “Corridor” is selected, the time required to leave the room can be set.

With the **projector function**, the lighting remains off after manual switch-off as long as movement is detected plus the set follow-up time. This function is suitable for conference rooms and classrooms where work is done with beamers, for example. The lighting can also be switched on again before the follow-up time has elapsed by pressing the button again.

When the “Projector/Corridor” function is selected, the following parameters can be set on the “Projector/ Corridor” card:

LO: Detector Configuration > Projector/Corridor	
Function	Projector
	Corridor

Switching between projector and corridor function can be done by means of group object and/or remote control if required. When the parameter is activated, the corridor function is active when a 1-telegram is sent and the projector function is active when a 0-telegram is sent.

LO: Detector Configuration > Projector/Corridor	
Function overwritable	**deactivated**
	via group object
	via remote control
	via group object and remote control

No.	Name	Function	C	R	W	T	M
60	LO: Input (DPT 1.002)	Change Projector = (0) Corridor = (1)	X	–	X	–	–

The setting via group object and / or remote control can optionally be overwritten with the ETS.

LO: Detector Configuration > Projector/Corridor	
Changed operation mode by ETS download (only visible when selecting "Group object" and "Group object and remote control")	**overwritable**
	not overwritable

LO: Detector Configuration > Projector/Corridor	
Waiting period corridor function in seconds	1...255 **(10)**

5.5.1.5 Orientation light

The orientation light can optionally be activated after the set follow-up time. When the last person has left the room, the follow-up time starts. When this is over, the lighting switches off. If the orientation light is activated, a second time is started with a brightness value that can be set as a percentage.

The differences between switching and regulation mode are described below.

With the RC-plus next N 230 outdoor detector (part no. 93527 or 93528), the colour (RGB) of the orientation and night light can be set via a colour chart.

With the RC-plus next N 230 outdoor detector (item no. 93527 or 93528) and the Aleum sensors (item no. 93584 or 93585), the colour (RGB) of the orientation and night light can be adjusted using a colour palette.

5.5.1.5.1 Orientation light (switching mode)

The orientation light function is only active if "brightness-dependent switching" is activated for the light output (LO) in switching mode!

In switching mode, there is the option of an orientation light for detectors with integrated LEDs. In Generation 7, this is possible with the Indoor 140-L-KNXs-DX (part no. 93526) and the RC-plus next N 230 (part no. 93527 or 93528) as well as the Aleum detectors (part no. 93584 and 93585).

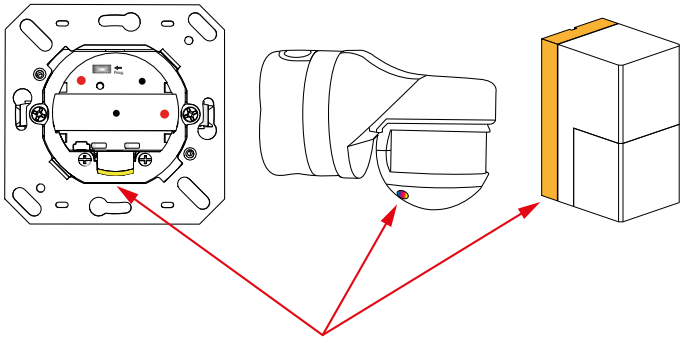

Orientation light LED

LO: Detector Configuration > Motion-dependent switching mode	
Orientation light	**deactivated**
	activated

The following parameters can be set on the "Orientation light" card when the function is activated:

5.5.1.5.1.1 Brightness of the LEDs in per cent

The brightness can be selected for the orientation light. This is done in percentage steps. The follow-up time can also be freely selected.

LO: Detector Configuration > Orientation Light	
Brightness LEDs in %	10...100 **(100)**

LO: Detector Configuration > Orientation Light	
Duration in minutes	1...255 **(1)**

5.5.1.5.1.2 Motion detection

This parameter can be used to determine whether the orientation light is controlled by the master device for the entire master-slave system or whether each device in the master-slave system takes over control via the orientation light

itself. So, if several devices in a master-slave system are mounted in a corridor, for example a hotel corridor, the orientation light can be switched on at all devices if one of the devices detects a movement, or each device switches on its own orientation light only if it detects movement itself.

LO: Detector Configuration > Orientation Light	
Motion detection	locally in each device
	globally through the entire master-slave system

5.5.1.5.1.3 Orientation light function

The orientation light can be switched on due to the luminosity being lower than the brightness threshold plus detected movement or via an object. This object can be linked with a timer, for example, to implement a night mode. In this way, the function can be enabled with a 1-telegram and the orientation light can be switched on in the dark.

LO: Detector Configuration > Orientation Light	
Orientation light function	**released**
	activatable by object

If the setting " activatable by object" is selected, the orientation light can be disabled or enabled after bus voltage return.

LO: Detector Configuration > Orientation Light	
After bus voltage return	locked
	released

No.	Name	Function	C	R	W	T	M
59	LO: Input (DPT 1.001)	Activation orientation light	X	–	X	–	–

5.5.1.5.2 Orientation light (regulation mode)

In regulation mode, it is possible to use both the internal LEDs (Indoor 140-L and RC plus next N) and the external luminaires for the orientation light.

LO: Detector Configuration > Motion-dependent regulation mode	
Orientation light	**deactivated**
	activated

The following parameters can be set on the "Orientation light" card when the function is activated:

On the "Orientation light" card, you can choose between activating the internal LEDs and/or the external lights. The brightness can be set as a percentage in both cases.

LO: Detector Configuration > Orientation Light	
Internal LEDs	**deactivated**
	activated

LO: Detector Configuration > Orientation Light	
Brightness LEDs in % (only visible when "internal LEDs" are selected)	0...100 **(100)**

LO: Detector Configuration > Orientation Light	
External luminaires	deactivated
	activated

LO: Detector Configuration > Orientation Light	
Brightness external luminaires in %	0...100 **(20)**

LO: Detector Configuration > Orientation Light	
Duration in minutes	1...255 **(1)**

5.5.1.5.2.1 Motion detection

This parameter can be used to determine whether the orientation light is controlled by the master device for the entire master-slave system or whether each device in the master-slave system takes over control via the orientation light itself. So, if several devices in a master-slave system are mounted in a corridor, e.g. a hotel corridor, the orientation light can be switched on at all devices if one of the devices detects a movement, or each device switches on its own orientation light only if it detects movement itself.

LO: Detector Configuration > Orientation Light	
Motion detection	locally in each device
	globally through the entire master-slave system

5.5.1.5.2.2 Orientation light function

The orientation light can be switched on due to the luminosity being lower than the set value brightness plus detected movement or via an object. This object can be linked with a timer, for example, to implement a night mode. In this way, the function can be enabled with a 1-telegram and the orientation light can be switched on in the dark.

LO: Detector Configuration > Orientation Light	
Orientation light function	**released**
	Activatable by object

If the setting “can be activated via object” is selected, the orientation light can be disabled or enabled after bus voltage return.

LO: Detector Configuration > Orientation Light	
After bus voltage return	locked
	released

No.	Name	Function	C	R	W	T	M
59	LO: Input (DPT 1.001)	Activation orientation light	X	–	X	–	–

5.5.1.6 Night light

The night light function is similar to the orientation light function, with the difference that the night light is only activated depending on the brightness, regardless of movement. So, if the brightness falls below the set value of the detector, the night light switches on. When movement is detected, the light then switches back to the set value. When the night light is activated, a different percentage value of the brightness can be set here than with the activated orientation light. Thus, for example, in a hotel corridor, the night light can be set to 10% basic brightness and when movement is detected, the orientation light level of, for example, 50% is used in semi-automatic mode.

With the RC-plus next N 230 outdoor detector (art. no. 93527 or 93528), the colour (RGB) of the orientation and night light can be set via a colour chart.

With the RC-plus next N 230 outdoor detector (item no. 93527 or 93528) and the Aleum sensors (item no. 93584 or 93585), the colour (RGB) of the orientation and night light can be adjusted using a colour palette.

The differences between switching and regulation mode are described below.

5.5.1.6.1 Night light (switching mode)

If the detector operates in switching mode, the night light is realised via the integrated LEDs. With Generation 7, this is possible with the Indoor 140-L-KNXs-DX (part no. 93526) and the RC-plus next N 230 (part no. 93527 or 93528) as well as the Aleum detectors (part no. 93584 and 93585).

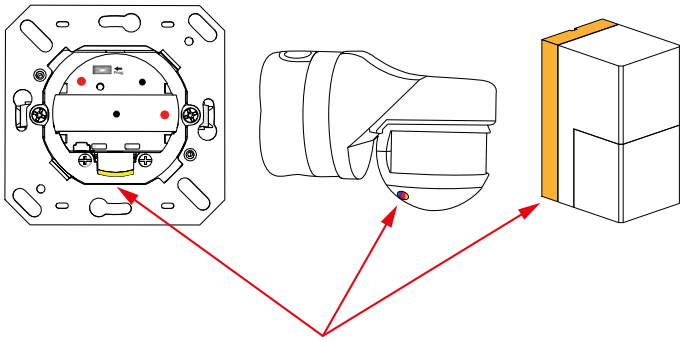

Night light LED

LO: Detector Configuration > Motion-dependent switching mode	
Night light	**deactivated**
	activated

The following parameters can be set on the "Night Light" card visible when the function is activated:

5.5.1.6.1.1 Brightness night light of the LEDs in percent

The brightness of the LEDs can be selected for the night light. This is done in percentage steps.

LO: Detector Configuration > Night Light	
Brightness of the LEDs In %	10...100 **(100)**

5.5.1.6.1.2 Night light function

The night light can be switched on independently of movement due to the luminosity being lower than the brightness threshold plus detected movement or via an object. This object can be linked with a timer, for example, to implement a night mode. In this way, the function can be enabled with a 1-telegram and the night light can be switched on in the dark.

LO: Detector Configuration > Night Light	
Night light function	**released**
	activatable by object

If the setting "activatable by object" is selected, the night light can be disabled or enabled after bus voltage return.

LO: Detector Configuration > Night Light	
After bus voltage return	locked
	released

No.	Name	Function	C	R	W	T	M
58	LO: Input (DPT 1.001)	Activation night light	X	–	X	–	–

5.5.1.6.2 Night light (regulation mode)

In regulation mode, it is possible to use both the internal LEDs (Indoor 140-L or RC plus next N) and the external luminaires for the night light.

LO: Detector Configuration > Motion-dependent regulation mode	
Night light	**deactivated**
	activated

The following parameters can be set on the "Night Light" card visible when the function is activated:

It is possible to choose between activating the internal LEDs and/or the external luminaires. The brightness can be set as a percentage in both cases.

LO: Detector Configuration > Night Light	
Internal LEDs	**deactivated**
	activated

LO: Detector Configuration > Night Light	
Brightness LEDs in % (only visible when "internal LEDs" are selected)	0...100 **(100)**

LO: Detector Configuration > Night Light	
External luminaires	deactivated
	activated

LO: Detector Configuration > Night Light	
Brightness external luminaires in % (only visible when "external luminaires" are selected)	0...100 **(20)**

5.5.1.6.2.1 Night light function

The night light can be switched on independently of movement due to the luminosity being lower than the set value brightness plus detected movement or via an object. This object can be linked with a timer, for example, to implement a night mode. In this way, the function can be enabled with a 1-telegram and the night light can be switched on in the dark.

LO: Detector Configuration > Night Light	
Night light function	**released**
	activatable by object

If the setting " activatable by object" is selected, the night light can be disabled or enabled after bus voltage return.

LO: Detector Configuration > Night Light	
After bus voltage return	locked
	released

No.	Name	Function	C	R	W	T	M
58	LO: Input (DPT 1.001)	Activation night light	X	–	X	–	–

5.5.1.7 Orientation light and night light after manual switch-off

	ATTENTION
⚠	This parameter is only visible if the orientation light and/or night light function is activated.

On the "Motion-dependent switching mode/regulation mode" card, the night light or orientation light can be activated or deactivated after manually switching off the main light. If this parameter is set to "activated", the lighting moves to the set percentage value of the orientation light for the correspondingly set follow-up time after manual switch-off. When motion is detected again, the main light is switched on again. After the follow-up time of the orientation light has expired, the detector switches the lighting to night light brightness. In this state, the impulse for switching on the lighting must come from the manual control (push-button press).

LO: Detector Configuration > Motion-dependent switching /regulation mode	
Orientation light and night light after manual switch-off	**deactivated**
	activated

5.5.1.8 Orientation light and night light global control of the slave LEDs

	ATTENTION
⚠	This parameter is only visible if the orientation light and/or night light function is activated.

The orientation or night light can be controlled either locally (each detector for itself) or globally (the master device controls).

With local control, each device switches the orientation and night light when movement is detected by this device or when the brightness falls below the set threshold.

With global control, the master device takes over control of the entire network. In this case, movement and brightness evaluation take place exclusively in the master device.

With global control, the master device communicates with the master-slave system.

- LED control 1 sends the information whether the LED should be switched on at the slave device.
- LED control 2 sends information about detected movement.
- LED control 3 sends the status "too bright" yes or no.

These objects must each be linked in separate group addresses within the master-slave system.

LO: Detector Configuration > Motion-dependent switching mode	
Orientation light and night light global control of slave LEDs	**deactivated**
	activated

No.	Name	Function	C	R	W	T	M
72	LO: Input (DPT 1.002)	LED control -1-	X	–	–	X	–
73	LO: Input (DPT 1.002)	LED control -2-	X	–	–	X	–
74	LO: Input (DPT 1.002)	LED control -3-	X	–	–	X	–

5.5.1.9 Colour of the orientation and night light LED

	ATTENTION
⚠	This parameter is only visible if the orientation light and/or night light function is activated.

	ATTENTION
⚠	This parameter applies exclusively to the RC-plus next N 230 outdoor detector (item no. 93527 or 93528) and the Aleum detectors (item no. 93584 or 93585). The RC-plus next N has an LED behind the lens of the anti-creep guard at the bottom of the unit for illuminating a house number or similar. The Aleum has a ring of lights around the perimeter as ambient lighting.

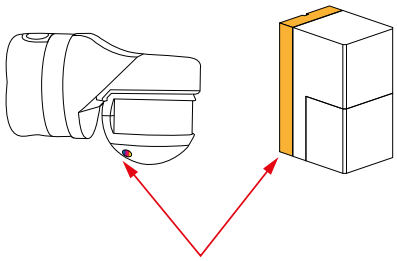

This LED is designed for RGB and can be defined via the ETS on the "Motion-dependent switching mode/regulation mode" card or parameterised via the APP (B. E. G. One).

LO: Detector Configuration > Motion-dependent switching/regulation mode	
Colour of the orientation light or night light LED	RGB **(R)**

5.5.1.10 Central OFF

The parameter "Central off" enables a switch-off with an optional time delay. This can be set under the "Central off" card when the parameter is activated.

When sending a 0-telegram to this object, the detector switches the lighting off if no movement is detected. Otherwise, the lighting remains switched on. If movement is detected after switching off by the central off function when the brightness value has fallen below this value, the lighting switches on again. If movement is detected within the delay time, the lighting remains switched on. This ensures that the lighting is only switched off in those rooms where no one is present.

LO: Detector Configuration > Motion-dependent switching/regulation mode	
Central Off	**deactivated**
	activated

The following parameter can be set on the "Central Off" card visible when the function is activated:

LO: Detector Configuration > Central Off	
Delay Central off function in seconds (0= directly OFF) (visible when "Central Off" is activated)	0...60 **(0)**

No.	Name	Function	C	R	W	T	M
2	General: Input (DPT 1.001)	Central OFF	X	–	X	–	–

5.5.1.11 Lock

If the parameter "Lock" is activated, a new card "Lock" appears on the left side.

LO: Detector Configuration > Motion-dependent switching/regulation mode	
Lock	**deactivated**
	activated

The following parameters can be set on the "Lock" card visible when the function is activated:

5.5.1.11.1 Behaviour upon activation of lock

No switching back on

The lighting remains switched on until no more movement has been detected for a follow-up time. After switching off, the lock becomes active.

Lock only

The current state of the lighting is maintained for the duration of the lock.

Lock and send value

In switching mode, the device is locked with a defined state (ON or OFF).

In regulation mode, a defined percentage value can be used for locking.

LO: Detector Configuration > Lock	
Behaviour upon activation of lock	**No switching back on**
	lock only (current status is preserved)
	lock and send value

LO: Detector Configuration > Motion-dependent switching mode	
Value (visible at "Lock and send value")	**1**
	0

LO: Detector Configuration > Motion-dependent regulation mode	
Value in % (visible at "Lock and send value")	0...100 **(100)**

5.5.1.11.2 Behaviour upon deactivation of lock

When unlocking, it can be selected whether the device is only unlocked and thus the device subsequently resumes the previous operation or whether a “1” or a “0” is to be sent in defined switching mode at the end of the locking. In this case, the follow-up time expires before the device resumes the previous operation.

In regulation mode, a percentage value can be specified for “unlock and send value”. Otherwise, the behaviour is identical to that in switching mode.

Furthermore, a feedback object of the lock is available to indicate the status of the lock even with a time limit.

LO: Detector Configuration > Lock	
Behaviour upon deactivation of lock	unlock
	unlock and send value

LO: Detector Configuration > Motion-dependent switching mode	
Value (visible with "Unlock and send value")	**1**
	0

LO: Detector Configuration > Motion-dependent regulation mode	
Value in % (visible with "Unlock and send value")	0...100 **(100)**

No.	Name	Function	C	R	W	T	M
40	LO: Input (DPT 1.001)	Lock	X	–	X	–	–

5.5.1.11.3 Apply time limit to lock

As a rule, the lock remains active until it is released again by means of an unlock telegram.

Optionally, there is the possibility to store a time period for the lock with the parameter "Apply time limit to lock", after which the lock is automatically released again.

In this case, the status of the lock can be displayed via group object 65 "Lock feedback".

LO: Detector Configuration > Lock	
Apply time limit to lock	**deactivated**
	activated

LO: Detector Configuration > Lock	
Locking period (only visible with activation "Locking limited in time")	00:00...24:59 hh:mm **(12:00)**

No.	Name	Function	C	R	W	T	M
65	LO: Output (DPT 1.001)	Lock feedback	X	–	–	X	–

5.5.1.11.4 Upon bus voltage return

It can be decided whether the device should be locked or not locked when the bus voltage returns.

LO: Detector Configuration > Lock	
Upon bus voltage return	**not locked**
	locked

5.5.1.11.5 Lock modifiable

The lock can be activated or deactivated either via group object or via remote control.

Thus, the lock can also be realised via IR if the parameter is activated.

LO: Detector Configuration > Lock	
Lock changeable	**via group object**
	via remote control
	via group object and remote control

The ETS programming is overwritten when the lock is influenced by remote control.

5.5.1.11.6 Lock with

It can be locked with a "1" or "0" telegram. The respective inverted telegram cancels the lock again.

LO: Detector Configuration > Lock	
Lock with (visible with "via group object" and group object u. remote control")	**1** 0

5.5.1.11.7 Cycle time during lock

The locking telegram can be sent cyclically if required.

LO: Detector Configuration > Lock	
Cycle time during lock in seconds	0...255 **(0)**

5.5.1.12 Behaviour upon bus voltage return

ATTENTION	
⚠	During connection to the bus, the detector is in the default settings. The lighting remains off until the detector has retrieved the parameters.

This parameter defines the behaviour of the detector when the bus voltage returns.

Same as for deactivation of the channel

The detector behaves as if the channel has been switched off. The lighting is switched off.

Same as for activation of the channel

The detector behaves as if the channel has been switched on. The lighting is switched on.

Same as before voltage loss

The detector behaves as before the bus voltage loss.

LO: Detector Configuration > Motion-dependent switching/regulation mode	
Behaviour upon bus voltage return	**same as for deactivation of the channel** same as for activation of the channel same as before voltage loss

5.5.1.13 Burn-in function

New fluorescent lamps should be burned in for a certain period of time before they are dimmed to ensure full utilisation of their service life and flicker-free operation. In the application, there is the parameter "Burn-in function" for this purpose, which can be activated or deactivated. This can be done via group object or remote control. When the function is activated, the detector operates as in switching mode for the set duration of the burn-in function. The lighting is only switched on and off, but not controlled, and cannot be dimmed manually via the detector. After the set duration has elapsed, the detector automatically switches to regulation mode and it can now also be dimmed manually with a long button press.

LO: Detector Configuration > Motion-dependent regulation mode	
Burn-in function	**deactivated**
	activated

The following parameters can be set on the "Burn-in function" card when the function is activated:

If necessary, the burn-in function can be stopped or paused prematurely in order to continue running at a later time. Group object 52 "Input - Burn-in start/stop" can be used for this purpose. The function is switched on or started with a 1-telegram and can be cancelled or interrupted with a 0-telegram.

The remaining duration of the burn-in time can be called up via group object. It is thus possible to have the remaining duration displayed in minutes via group object.

Furthermore, it can be decided whether the burn-in time should be restarted after bus voltage return or whether the behaviour before bus voltage failure should remain.

LO: Detector Configuration > Burn-in Function	
Start burn-in function	**via group object**
	via remote control
	via group object and remote control

LO: Detector Configuration > Burn-in Function	
Burn-in time in hours	1...100 **(100)**

LO: Detector Configuration > Burn-in Function	
Burn-in function	**cannot be interrupted/cancelled**
	can be cancelled
	can be interrupted

LO: Detector Configuration > Burn-in Function	
Behaviour upon bus voltage return	**same as before voltage loss**
	restart

LO: Detector Configuration > Burn-in Function	
Remaining burn-in time can be called up	**deactivated**
	activated

No.	Name	Function	C	R	W	T	M
52	LO: Input (DPT 1.010)	Burn-in start/stop	X	–	X	–	–
53	LO: Input (DPT 1.010)	Call up remaining burn-in time	X	–	X	–	–
71	LO: Output (DPT 7.006)	Remaining burn-in time	X	–	–	X	–

5.5.1.14 Additional settings motion sensor(s)

After activating this parameter, a card "Motion sensors" appears on the left side.

LO: Detector Configuration > Motion-dependent Switching/Control Mode	
Advanced settings Motion sensor(s)	**deactivated**
	activated

The following parameters can be set on the "Motion sensors" card when the function is activated:

5.5.1.14.1 Safety delay

The safety delay is used to ensure that the detector does not switch on again immediately after switching off when it detects movement. This is based on the fact that some luminaires develop heat radiation that can lead to faulty switching.

This delay can be set between 0 ... 255 seconds, depending on the heat development of the lamp.

LO: Detector Configuration > Motion Sensors	
Safety delay in seconds	0...255 **(3)**

5.5.1.14.2 Same settings for all sensors (direction detection)

When the parameter is activated, all sensors are operated with the same sensitivity. When deactivated, the settings can be made for up to 4 sensors depending on the device variant.

With this function, the individual sensors can be made less sensitive or blanked out. The use of blinds may therefore be unnecessary. Furthermore, the deactivation of the sensors can also be used across channels via LO - HVAC3 and Slave (SL) in order to assign each motion sensor its own channel.

The motion sensors are marked with numbers 1-4

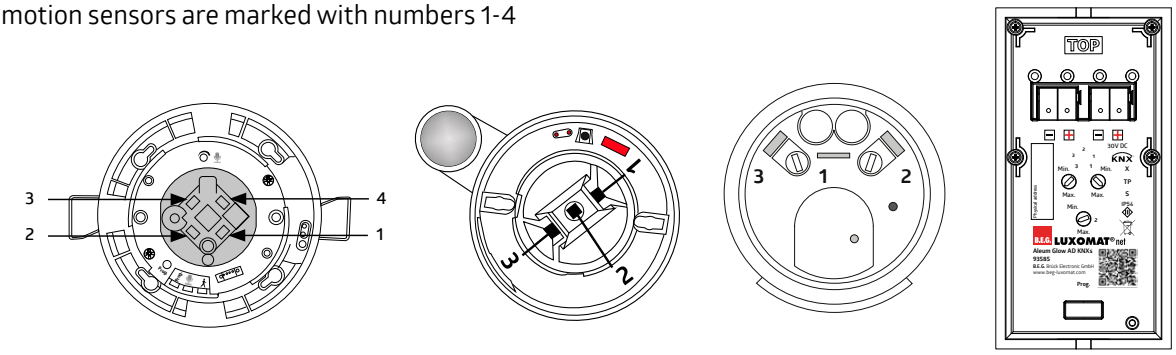

For example, in a T-corridor, the motion sensors S1 to S4 can be configured as shown in the figure and in this way assigned to the outputs LO to HVAC 3 to control the lighting in the individual sections of the corridor.

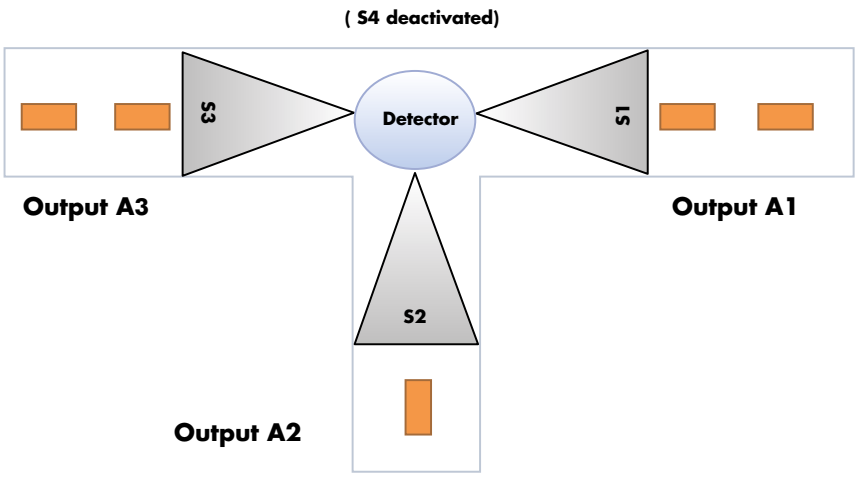

LO: Detector Configuration > Motion Sensors	
Same settings for all sensors (direction detection)	deactivated
	activated

5.5.1.14.3 Sensitivity of sensors

The sensitivity of the sensors can be set between “1” (insensitive) and “10” (sensitive). If the setting “0” is selected, the corresponding sensor is deactivated. The detectors are delivered from the factory with a sensitivity of “9”, i.e. 90%. Self-triggering may occur with a sensitivity of 100%.

5.5.1.14.4 Sensitivity changeable

If required, the sensitivity of the sensors can be changed via group object and/or remote control without ETS.

LO: Detector Configuration > Motion Sensors	
Sensitivity of sensors	0...10 **(9)**

LO: Detector Configuration > Motion Sensors	
Sensitivity sensor (Sensor X) (only visible when "Same settings for all sensors" is deactivated)	0...10 **(9)**

LO: Detector Configuration > Motion Sensors	
Sensitivity modifiable	**deactivated**
	via group object
	via remote control
	via group object and remote control

LO: Detector Configuration > Motion Sensors	
Modified sensitivity by ETS download (only visible when selecting "Group object" and "Group object and remote control")	**overwritable**
	not overwritable

This overwrites the ETS programming.

The function changed here can be overwritten via ETS download if required.

LO

No.	Name	Function	C	R	W	T	M
61	LO: Input (DPT 5.001)	Sensitivity sensors	X	–	X	–	–
61	LO: Input (DPT 5.001)	Sensitivity sensor 1 / Aleum sensor creep protection	X	–	X	–	–
62	LO: Input (DPT 5.001)	Sensitivity sensor 2 / Aleum sensor 2 front view centre	X	–	X	–	–
63	LO: Input (DPT 5.001)	Sensitivity sensor 3 / Aleum sensor 3 front view right	X	–	X	–	–
64	LO: Input (DPT 5.001)	Sensitivity sensor 4 / Aleum sensor 1 front view left	X	–	X	–	–

HVAC 1

No.	Name	Function	C	R	W	T	M
84	HVAC1: Input (DPT 5.001)	Sensitivity sensors	X	–	X	–	–
84	HVAC1: Input (DPT 5.001)	Sensitivity sensor 1 / Aleum sensor creep protection	X	–	X	–	–
85	HVAC1: Input (DPT 5.001)	Sensitivity sensor 2 / Aleum sensor 2 front view centre	X	–	X	–	–
86	HVAC1: Input (DPT 5.001)	Sensitivity sensor 3 / Aleum sensor 3 front view right	X	–	X	–	–
87	HVAC1: Input (DPT 5.001)	Sensitivity sensor 4 / Aleum sensor 1 front view left	X	–	X	–	–

HVAC 2

No.	Name	Function	C	R	W	T	M
99	HVAC2: Input (DPT 5.001)	Sensitivity sensors	X	–	X	–	–
99	HVAC2: Input (DPT 5.001)	Sensitivity sensor 1 / Aleum sensor creep protection	X	–	X	–	–
100	HVAC2: Input (DPT 5.001)	Sensitivity sensor 2 / Aleum sensor 2 front view centre	X	–	X	–	–
101	HVAC2: Input (DPT 5.001)	Sensitivity sensor 3 / Aleum sensor 3 front view right	X	–	X	–	–
102	HVAC2: Input (DPT 5.001)	Sensitivity sensor 4 / Aleum sensor 1 front view left	X	–	X	–	–

HVAC 3

No.	Name	Function	C	R	W	T	M
114	HVAC3: Input (DPT 5.001)	Sensitivity sensors	X	–	X	–	–
114	HVAC3: Input (DPT 5.001)	Sensitivity sensor 1 / Aleum sensor creep protection	X	–	X	–	–
115	HVAC3: Input (DPT 5.001)	Sensitivity sensor 2 / Aleum sensor 2 front view centre	X	–	X	–	–
116	HVAC3: Input (DPT 5.001)	Sensitivity sensor 3 / Aleum sensor 3 front view right	X	–	X	–	–
117	HVAC3: Input (DPT 5.001)	Sensitivity sensor 4 / Aleum sensor 1 front view left	X	–	X	–	–

SL

No.	Name	Function	C	R	W	T	M
19	SL: Input (DPT 5.001)	Sensitivity sensors	X	–	X	–	–
19	SL: Input (DPT 5.001)	Sensitivity sensor 1 / Aleum sensor creep protection	X	–	X	–	–
20	SL: Input (DPT 5.001)	Sensitivity sensor 2 / Aleum sensor 2 front view centre	X	–	X	–	–
21	SL: Input (DPT 5.001)	Sensitivity sensor 3 / Aleum sensor 3 front view right	X	–	X	–	–
22	SL: Input (DPT 5.001)	Sensitivity sensor 4 / Aleum sensor 1 front view left	X	–	X	–	–

5.5.1.15 Sound sensor

Some detectors comprise a sound sensor. Please have a look at the device variant. The sound sensor is used for noise detection and is used in rooms that are not fully visible to the detector, for example in washrooms with individual cubicles. Depending on the setting, noise detection is only activated after the detector has detected movement by means of a passive infrared sensor. The sound sensor is then active and the follow-up time of the detector is restarted according to the motion and noise detection. After the lighting has been switched off automatically, the sound sensor is still active for a time-limited detection window (waiting period) so that the lighting can still be reactivated via noise after it has been switched off. The duration of the waiting time can be selected at will.

Automatic threshold adjustment can be used to filter out constant background noise.

LO: Detector Configuration > Motion-dependent switching/regulation mode	
Sound sensor	**deactivated**
	activated

The following parameters can be set on the "Sound sensor" card when the function is activated:

In order to receive the signals from the sound sensor, noise detection must be activated for the individual outputs (LO - HVAC 3 and Slave (SL)). The example below shows this for the light output LO. The sound sensor can be used individually for each channel (LO, HVAC 1 - HVAC 3 and SL). For this purpose, the sound sensor in each channel can generally be locked or enabled via ETS, but also via group object and / or remote control.

LO: Detector Configuration > Sound Sensor	
Sound sensor	locked
	released

LO: Detector Configuration > Sound Sensor	
Activation / deactivation modifiable	**deactivated**
	via group object
	via remote control
	via group object and remote control

LO: Detector Configuration > Sound Sensor	
Activation status by ETS download (only visible with "Detector Configuration" and "via group object and remote control" activated)	**overwritable** not overwritable

This overwrites the ETS programming.

Depending on the setting, the sound sensor can also be used to activate the channel. Thus, the channel becomes active as soon as the detector has detected a noise. The follow-up time is also restarted in this case according to the motion and noise detection.

LO: Detector Configuration > Sound Sensor	
Starting via sound sensor	**deactivated** activated

A waiting period can be set. The sound sensor is activated at the first detected movement and remains activated during the follow-up time plus the waiting time. This means that after the waiting period has expired and the lighting has been switched off, the sound sensor remains active for the period defined by the waiting period and the lighting can be switched on again by a sound.

LO: Detector Configuration > Sound Sensor	
Waiting period in seconds (only visible with "Start via sound sensor" deactivated)	0...255 **(10)**

The safety delay is used to ensure that the detector does not switch on again immediately after switching off if it detects movement / noise. This is based on the fact that some luminaires develop heat radiation that can lead to faulty switching.

This delay can be set between 0 ... 255 seconds, depending on the heat development of the lamp.

LO: Detector Configuration > Sound Sensor	
Safety delay in seconds	0...255 **(1)**

LO

No.	Name	Function	C	R	W	T	M
55	LO: Input (DPT 1.001)	Activation sound sensor	X	–	X	–	–

HVAC 1

No.	Name	Function	C	R	W	T	M
83	HVAC1: Input (DPT 1.001)	Activation sound sensor	X	–	X	–	–

HVAC 2

No.	Name	Function	C	R	W	T	M
98	HVAC2: Input (DPT 1.001)	Activation sound sensor	X	–	X	–	–

HVAC 3

No.	Name	Function	C	R	W	T	M
113	HVAC3: Input (DPT 1.001)	Activation sound sensor	X	–	X	–	–

SL

No.	Name	Function	C	R	W	T	M
15	SL: Input (DPT 1.001)	Activation sound sensor	X	–	X	–	–

5.5.1.16 Adjustment of the dimming curve

The DALI dimming behaviour is adapted to the human eye. This serves to increase well-being. Glare of the eye is avoided. If no DALI curve is stored, for example with a dimming actuator for 1-10V, the dimming curve of the actuator can be defined by five points under this parameter, so that linearity is also created and the comfort of the DALI dimming behaviour is emulated.

DALI ECGs behave exponentially with regard to the light curve. The changes at the output are rather small at the beginning and become larger towards the end.

When using a DALI/KNX gateway, the system is linearised by forming the inverse function. Here, no adjustment of the curve in the detector needs to be made.

When using a dimming actuator with a different curve progression, the detector requires the corresponding adaptation values of the curve progression.

LO: Detector Configuration > Motion-dependent regulation mode	
Adjustment of the dimming curve	**deactivated**
	activated

The following parameters can be set on the "Adjustment of the dimming curve" card that is visible when the function is activated:

At point 1, the values for the dimming input and dimming output are set at 0 % each. Points 2 to 4 are configurable at will in 5 % steps. Point 5 is set at 100 % in each case.

LO: Detector Configuration > Adjustment of the dimming curve	
Point 2 Dimming input in %	0...100 **(55)**
Point 2 Dimming output in %	0...100 **(5)**

LO: Detector Configuration > Adjustment of the dimming curve	
Point 3 Dimming input in %	0...100 **(75)**
Point 3 Dimming output in %	0...100 **(15)**

LO: Detector Configuration > Adjustment of the dimming curve	
Point 4 Dimming input in %	0...100 **(85)**
Point 4 Dimming output in %	0...100 **(40)**

5.5.2 Follow-up time (card)

The follow-up time defines the duration during which the connected load remains switched on although no more movement has been detected. If movement is detected again within the follow-up time, it is restarted.

5.5.2.1 Follow-up time (parameter)

The "Follow-up time" parameter sets the duration of the follow-up time. This can be between 1 second and 24 hours, the default value is 10 minutes.

LO: Detector Configuration > Follow-up time	
Follow-up time	00:00:01...24:00:00 hh:mm:ss **(00:10:00)**

5.5.2.2 Overwrite follow-up time

The follow-up time can be changed without ETS via group object, whereby it is entered in the format "minutes".

LO: Detector Configuration > Follow-up time	
Follow-up time overwritable	**deactivated**
	via group object
	via remote control
	via group object and remote control

The changed follow-up time can optionally be overwritten by ETS download or not.

LO: Detector Configuration > Follow-up time	
Modified follow-up time by ETS download (only visible when selecting "Group object" and "Group object and remote control")	**overwritable**
	not overwritable

No.	Name	Function	C	R	W	T	M
48	LO: Input (DPT 7.006)	Follow-up time	X	–	X	–	–

5.5.2.3 Triggering

It is determined when a triggering is to take place:

- **Immediately upon detected movement**
  The telegram is sent immediately when movement is detected and the luminosity is less than the brightness threshold.

- **After observation time**
  If this option is selected, further parameters become visible. An observation time and a number of observation windows can be set. At least one movement must be detected in each window for the channel to switch on.
  Example: Three observation windows with 10s observation time each.
  After the first detected movement (A), the detector starts window 1. If no movement is detected during the observation time, the evaluation is aborted. If at least one movement (B) was detected during the window, the second observation window is started after the duration of the first window (C) has elapsed. Here, too, the evaluation is aborted if no movement is detected within the duration of the window. However, if at least one movement (D) is detected, the third window is started (E). If more than three windows have been parameterised, this is repeated for the entire number of observation windows. The detector switches on as soon as the first movement is detected in the last window (F). This results in a delay time of 21s to 30s in this example (depending on the last movement detected). If there is no movement in a window, all windows are reset.

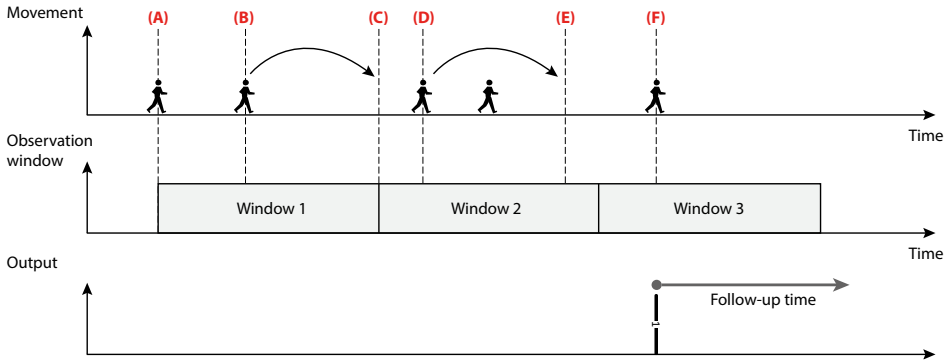

LO: Detector Configuration > Follow-up time	
Triggering	**immediately upon detected movement**
	after observation time

5.5.2.4 Waiting period after switch-off in semi-automatic mode

This parameter only refers to semi-automatic mode and causes the lighting to be switched on again automatically for a defined duration after the follow-up time has elapsed and the lighting has thus been switched off. A waiting period can be set as the duration or the duration of the orientation light (of the internal LEDs) can be used.

LO: Detector Configuration > Follow-up time	
Waiting period after switch-off in semi-automatic mode	duration orientation light
	duration reaction window

LO: Detector Configuration > Follow-up time	
Waiting period in seconds	0...255 **(10)**

5.5.2.5 Setting the follow-up time of the sensors individually (direction detection)

If this parameter is activated, a separate percentage of the follow-up time can be set for each sensor, taking into account the device variant for detectors with **more than one motion sensor** (PD4N-KNXs-ST/ DX, PD4-KNXs-GH-DX-AP, RC plus next N 230 KNXs-DX, Aleum Glow KNXs).

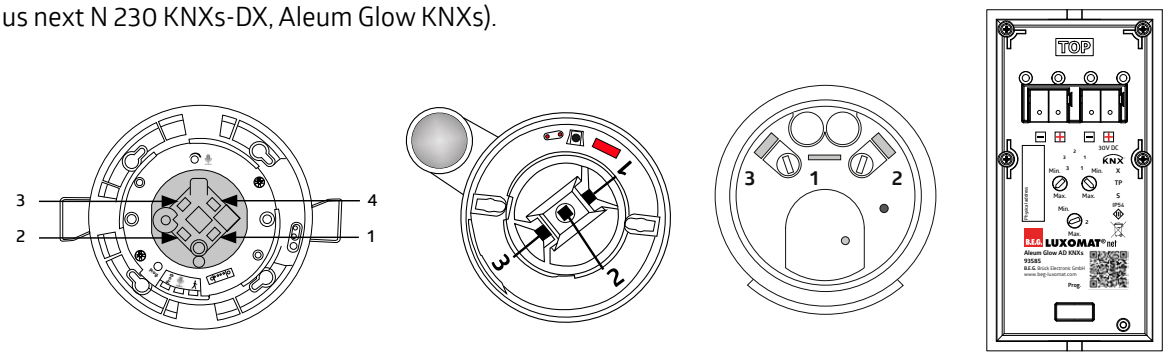

Application example:

- RC plus next N 230 KNXs-DX with two sensors for remote detection and one for anti-creep zone, mounted above the front door
- Follow-up time for sensor 1 (short way to the front door, left): 50 %.
- Follow-up time for sensor 2 (long access road to the house, right): 100 %.
- Follow-up time for sensor 3 (anti-creep zone, area of the front door itself): 25 %
- Set follow-up time: 4 minutes

If a person moves out of the house, he or she is first detected by the anti-creep sensor and then by the corresponding sensor for remote detection, in this case sensor 2. Thus, the follow-up time set for sensor 2 expires (100 % of 4 minutes), because the person was detected here last. The safety of the person in the outdoor area can thus be increased (Figure A).

If the person enters the house, he or she is first detected by one of the sensors for remote detection and finally by sensor 3 (anti-creep). In this case, the follow-up time set for sensor 3 (25 % of 4 minutes) expires and energy can be saved (Figure B).

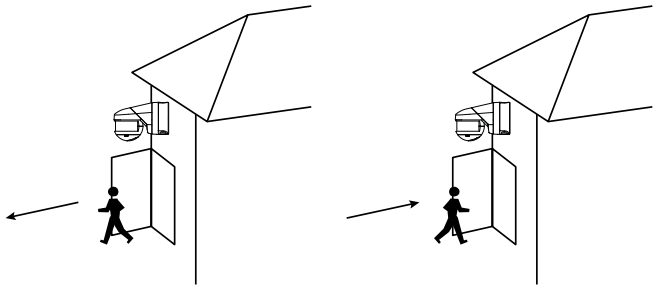

Picture A Picture B

LO: Detector Configuration > Follow-up time	
Individual follow-up time of the sensors (direction detection)	**deactivated**
	activated

LO: Detector Configuration > Follow-up time	
Proportion of the follow-up time for sensor 1 in %	**100**
	50
	25
	12,5

LO: Detector Configuration > Follow-up time	
Proportion of the follow-up time for sensor 2 in %	**100**
	50
	25
	12,5

LO: Detector Configuration > Follow-up time	
Proportion of the follow-up time for sensor 3 in %	**100**
	50
	25
	12,5

LO: Detector Configuration > Follow-up time	
Proportion of the follow-up time for sensor 4 in %	**100**
	50
	25
	12,5

5.5.2.6 Short Presence

The "Short presence" parameter makes it possible to shorten the follow-up time if a room is only entered briefly, for example to fetch something. The lighting is then only switched on for a percentage of the follow-up time.

The waiting time of the short presence can be set. If the room is left again within this time, the "short presence" function is active. The percentage of the follow-up time can be set via parameters. If, for example, a follow-up time of 10 minutes is used and the percentage is set to 50 %, the lighting is switched off after 5 minutes after leaving the room within the set time window. The set follow-up time must be at least 1 minute.

LO: Detector Configuration > Follow-up time	
Time window for short presence in seconds	1...120 **(0)**

LO: Detector Configuration > Follow-up time	
Percentage of follow-up time for short presence in % (only visible with "Time window for short presence > 0s")	**100**
	50
	25
	12,5

5.5.2.7 Self-adjustment of the follow-up time

When this parameter is activated, the detector learns the switching behaviour and adapts it to the fluctuation of the corresponding room.

If a follow-up time of, for example, 2 minutes is used and the detector switches off the lighting due to lack of movement, but switches it on again within a time window of <20 seconds due to renewed movement, the follow-up time doubles to 4 minutes in order to avoid unnecessary switching cycles.

The detector repeats this process up to a maximum follow-up time of 30 minutes.

However, in this example, if there are switching pauses of more than two minutes again after adjusting the follow-up time upwards, the detector halves the follow-up time again to two minutes. This process is repeated step by step, with the originally set follow-up time being the minimum.

LO: Detector Configuration > Follow-up time	
Self-adjustment of the follow-up time (up to max. 30 minutes)	**deactivated**
	activated

5.5.3 Switch-on threshold / Set values Brightness

Depending on whether the detector is operating in switching mode or in regulation mode, either the "Switch-on threshold" (switching mode) or "Set values Brightness " (regulation mode) card is visible on the left-hand side.

5.5.3.1 Switch-on threshold (card)

On the "Switch-on threshold" card, settings can be made that affect the automatic switching on or off of the lighting. The brightness value set here forms the switch-on threshold. If the brightness falls below this threshold and the detector detects movement, the lighting is switched on.

5.5.3.1.1 Switching depending on brightness

LO: Detector Configuration > Switch-on Threshold	
Switching depending on brightness	deactivated
	activated

Only if the parameter is activated, the other setting options are visible.

5.5.3.1.2 Switch-on threshold in lux

The value entered here represents the brightness value below which the detector switches on the connected lighting.

LO: Detector Configuration > Switch-on Threshold	
Switch-on threshold in Lux	5 ... 2000 **(500)**

5.5.3.1.3 Overwrite switch-on threshold

If required, the switch-on threshold can be overwritten by means of a group object and/or remote control without ETS.

The brightness threshold changed here can be overwritten via ETS download if required.

LO: Detector Configuration > Switch-on Threshold	
Switch-on threshold overwritable	**deactivated**
	via group object
	via remote control
	via group object and remote control

This overwrites the ETS programming.

5.5.3.1.4 Additional threshold

If a second brightness threshold is required, a second brightness value can be entered here. It is possible to switch between the two values at any time. In this case, threshold 1 is active with a 0-telegram and threshold 2 with a 1-telegram.

LO: Detector Configuration > Switch-on Threshold	
Additional threshold	**deactivated**
	activated

LO: Detector Configuration > Switch-on Threshold	
Switch-on threshold 2 in Lux (only visible if additional threshold is activated)	5...2000 **(1200)**

5.5.3.1.5 Calculation of the switch-off threshold

The duration in which the switch-off threshold is calculated is set here. The duration depends on the connected lighting, which should have reached its full brightness before the measuring process is finished so that the correct stroke between switched-on and switched-off lighting can be measured.

LO: Detector Configuration > Switch-on Threshold	
Calculation of the switch-off threshold in minutes	1 ... 10 **(2)**

5.5.3.1.6 Hysteresis of the switch-off threshold

The hysteresis of the switch-off threshold is a tolerance value that is taken into account in the calculation in order to avoid switching on again due to the change in light caused by switching off.

LO: Detector Configuration > Switch-on Threshold	
Hysteresis of the switch-off threshold in Lux	50 ... 255 **(100)**

5.5.3.1.7 Daylight-dependent switch-off delay

The daylight-dependent switch-off delay is the duration during which the detector detects that the switch-on threshold has been permanently exceeded due to sufficient daylight being present. After the duration has elapsed, the detector switches off the lighting despite detected movement.

LO: Detector Configuration > Switch-on Threshold	
Daylight-dependent switch-off delay in minutes	1 ... 60 **(10)**

5.5.3.1.8 Waiting period after daylight-dependent switch-off in semi-automatic mode

This parameter only refers to semi-automatic mode and causes the detector to switch the lighting back on after it has been switched off due to increasing daylight if movement is detected and the brightness falls below the threshold again. This is based on the set follow-up time.

LO: Detector Configuration > Switch-on Threshold	
Waiting period after daylight-dependent switch-off in semi-automatic mode	deactivated
	activated

5.5.3.2 Brightness set values (card)

When using the detector in the operation mode "regulation", the detector sends a telegram to the actuator (DIM, DALI) for daylight-dependent control via a value object. In this way, the detector controls the connected lighting to the set brightness set value depending on movement and the influence of daylight.

	ATTENTION
⚠	ATTENTION: Daylight-dependent control can only be implemented up to a mounting height of max. 5m. The exception is the GH detector (93518), where the adjustable telescopic sensor enables daylight-dependent control up to a mounting height of 16m. If the detector is mounted higher, only the orientation light function can be used to provide basic lighting when there is no movement.

5.5.3.2.1 Set value Brightness

If the set value is exceeded, the detector dims the lighting and, depending on the setting, switches it off if there is sufficient daylight.

LO: Detector Configuration > Set Value Brightness	
Set value Brightness in Lux	5...2000 **(500)**

5.5.3.2.2 Set value Brightness overwritable

The set value Brightness be overwritten if required by means of group object and/or remote control. When the parameter "Set value Brightness overwritable" is activated, group object 49 "LO: Input - Set value 1" (DPT 9.004) appears.

The changed operation mode can optionally be overwritten by ETS download or not.

LO: Detector Configuration > Set Value Brightness	
Set value Brightness overwritable	**deactivated**
	via group object
	via remote control
	via group object and remote control

LO: Detector Configuration > Set Value Brightness	
Changed brightness set value by ETS download (only visible when selecting "Group object" or "Group object and remote control")	**overwritable**
	not overwritable

This overwrites the ETS programming.

No.	Name	Function	C	R	W	T	M
49	LO: Input (DPT 9.004)	Set value 1	X	–	X	–	–

5.5.3.2.3 Additional set value / fixed value

An additional set value can be defined here. The object can be used to switch between set value 1 and set value 2. Application example: In sports halls, two different light values are required for training or competition operation, which can be switched over accordingly by the staff. When sending a 0-telegram to object 50 LO: Input (DPT 1.002) - change set value 1= (0), set value 2= (1), set value 1 is active, when sending a 1-telegram, set value 2 is active.

LO: Detector Configuration > Set Value Brightness	
Additional set value / fixed value	**deactivated**
	activated

LO: Detector Configuration > Set Value Brightness	
Set value Brightness 2 in Lux	5...2000 **(1200)**

No.	Name	Function	C	R	W	T	M
50	LO: Input (DPT 1.002)	Change set value 1=(0), set value 2=(1)	X	–	X	–	–

5.5.3.2.4 Fixed value at start/stop in %.

As a further option, an additional fixed value can be defined for starting or stopping in percent, for example to provide full brightness for cleaning operation.

When sending a 0-telegram to object 51 LO: Input (DPT 1.002) change set value=(0), fixed value=(1), set value is active, when sending a 1-telegram, fixed value is active.

LO: Detector Configuration > Set Value Brightness	
Fixed value at start in %	0...100 **(100)**

LO: Detector Configuration > Set Value Brightness	
Fixed value at stop in %	0...100 **(0)**

No.	Name	Function	C	R	W	T	M
51	LO: Input (DPT 1.002)	Change set value=(0), fixed value=(1)	X	–	X	–	–

5.5.3.2.5 Send colour value

In addition, a colour value (RGB) can be sent via group object 70 LO: Output (DPT 232.600) - Colour value RGB. A colour value for set values 1 and 2 and a colour value for the fixed value can be selected here.

LO: Detector Configuration > Set Value Brightness	
Send colour value	**is not sent**
	is sent

LO: Detector Configuration > Set Value Brightness	
Colour at set value 1 and 2	RGB **(R)**

LO: Detector Configuration > Set Value Brightness	
Colour at fixed value	RGB **(G)**

No.	Name	Function	C	R	W	T	M
70	LO: Output (DPT 232.600)	Colour value RGB	X	–	–	X	–

5.5.4 Switching output / Controller configuration

Depending on whether the detector is operating in switching mode or in regulation mode, either the "Switching output" (switching mode) or "Controller configuration" (regulation mode) card is visible on the left-hand side.

5.5.4.1 Switching output (card)

In switching mode, the lighting is switched on via 1-bit telegrams depending on movement and switch-on threshold and switched off again after the follow-up time has elapsed, provided no movement was detected during this time.

In addition to the switching object (1 bit), a value object (1 byte) can also be used to set a fixed percentage value for a lighting, for example. This can be defined for ON and OFF. A combination of switching and value object is also possible.

Furthermore, the start or stop value can also be specified as a value object via group object.

This can be done either manually or, for example, with a timer:

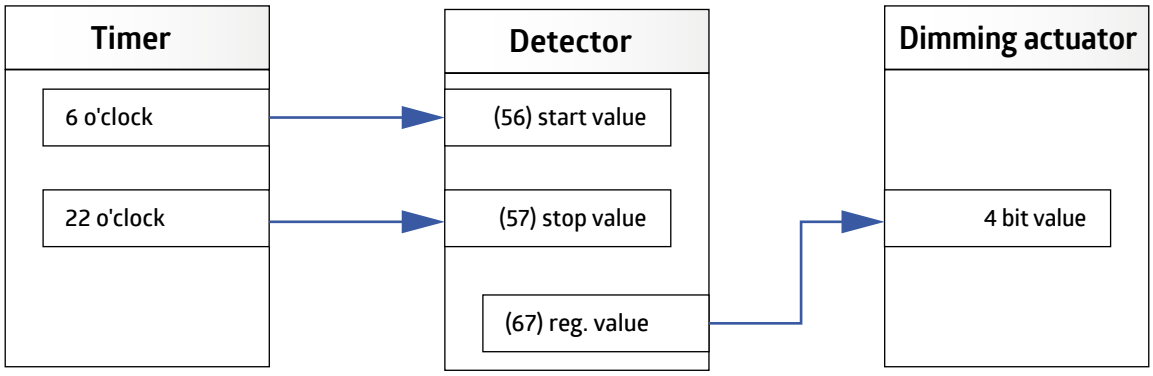

By means of group object 56 (Start value), the last value of the dimming actuator can be used again as the start value. This means that the last value before switching off is used again when switching on the next time (last level). For this, the parameter "Start value can only be changed with external influence" must be activated so that the detector adopts the last manually set value, but not the OFF telegram.

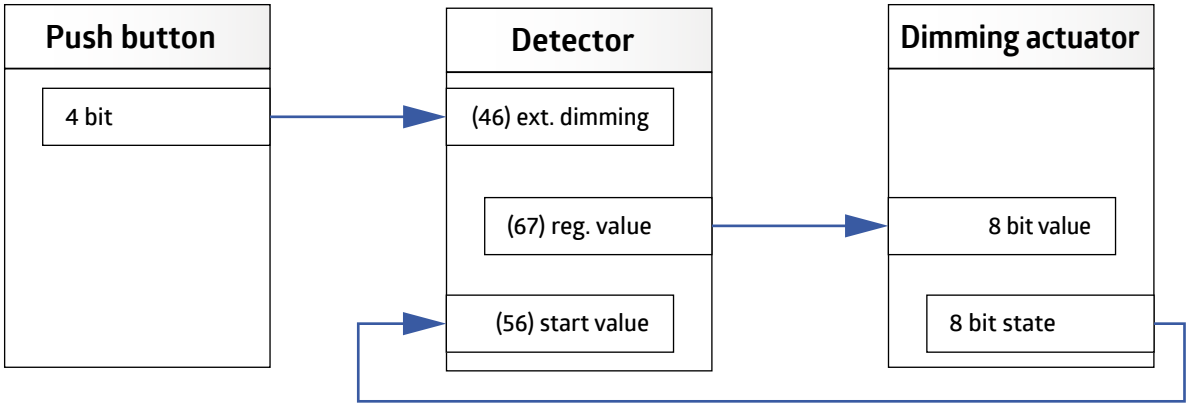

5.5.4.1.1 Detector sends

It is determined what the detector sends as soon as a triggering has taken place and what is sent after the follow-up time has expired.

The following setting options are available:

LO: Detector Configuration > Switching output	
Detector sends	**switching object**
	value object
	switching and value object
	scene number

Depending on the selected option, different parameters become visible.

5.5.4.1.1.1 Detector sends ➜ Switching object

If the selection is set to "Switching object", you can choose between 0- and 1-telegram.

LO: Detector Configuration > Switching output	
Telegram when starting	is sent

LO: Detector Configuration > Switching output	
Value	0 ... 1 **(1)**

LO: Detector Configuration > Switching output	
Telegram when stopping	is sent

LO: Detector Configuration > Switching output	
Value	0 ... 1 **(0)**

No.	Name	Function	C	R	W	T	M
67	LO: Output (DPT 1.001)	Switch	X	–	–	X	–

5.5.4.1.1.2 Detector sends ➜ Value object

With the "Value object" setting, a defined percentage value can be sent. In this way, lighting can be "switched" with dimmed brightness values.

LO: Detector Configuration > Switching output	
Telegram when starting	is sent

LO: Detector Configuration > Switching output	
Value in %	0 ... 100 **(100)**

LO: Detector Configuration > Switching output	
Start value only changeable by external influence	**deactivated**
	activated

LO: Detector Configuration > Switching output	
Telegram when stopping	is sent

LO: Detector Configuration > Switching output	
Value in %	0 ... 100 **(0)**

No.	Name	Function	C	R	W	T	M
67	LO: Output (DPT 5.001)	Value	X	–	–	X	–

5.5.4.1.1.3 Detector sends ➜ Switching and value object

This can be used, for example, to control the lighting via the value object and to transmit the status (On / Off) to the actuator via the switching object.

The value of the value object can be changed via group object Trigger value (object 43).

If this option is selected, the parameters and the group object described under “Switching object” and “Value object” are available.

5.5.4.1.1.4 Detector sends ➜ Scene number

With the option “Scene number”, a taught-in scene (1 ... 64) can be called up. This applies when triggering or at the end of the follow-up time.

LO: Detector Configuration > Switching output	
Telegram when starting	is sent

LO: Detector Configuration > Switching output	
Scene number	1 ... 64 **(1)**

LO: Detector Configuration > Switching output	
Telegram when stopping	is sent

LO: Detector Configuration > Switching output	
Scene number	1 ... 64 **(2)**

5.5.4.1.2 Cycle time in seconds

The status of the channel can be sent cyclically after activating this parameter. In this way, a “heartbeat” can be realised. Here, the 1- or 0-telegram is sent accordingly. A failure or loss of the detector can thus be monitored at any time. A duration of 0 seconds corresponds to deactivation of the function.

LO: Detector Configuration > Switching Output	
Cycle time in seconds	0 ... 255 **(0)**

5.5.4.2 Controller configuration (card)

5.5.4.2.1 Starting behaviour

The behaviour of the lighting during switch-on is defined here. The lighting can either be dimmed from below to the set value brightness, jump to a fixed percentage value or switch on at a calculated value close to the set value brightness.

LO: Detector Configuration > Controller Configuration	
Starting behaviour	Softstart
	Jump to a fixed value
	Jump to a calculated value

5.5.4.2.1.1 Softstart

With this setting, the lighting adjusts to the set value from below. This means that a person entering the room is not dazzled and the eyes get used to the lighting conditions better.

5.5.4.2.1.1.1 Relative dimming

When this parameter is activated, the soft start is executed via the 4-bit object “Relative dimming” (see following figure). Thus, this object must be connected to the 4-bit object of the actuator. This reduces the bus load because the detector automatically works with start/stop telegrams. For this, the status (8-bit object) of the dimming actuator must be read to obtain the current status. The same group address of the control value (object 52, 8 bit) can be used. The subsequent control is then controlled with the 8-bit control object.

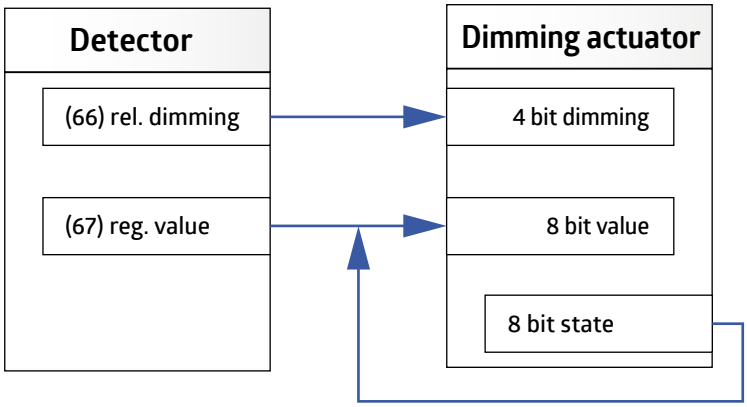

For manual dimming via the external influence, a separate group address must be used for the 4-bit soft start and the external influence 4-bit dimming (see chapter 4.5.1.2).

LO: Detector Configuration > Controller Configuration	
Relative dimming (only visible with start behaviour "soft start")	**deactivated** activated

ATTENTION	
⚠	If the parameter is deactivated, the step size of the dimming process can be selected in percent. The speed of the soft start can be determined by the delay in milliseconds.

LO: Detector Configuration > Controller Configuration	
Step size in %	1 ... 100 **(4)**

LO: Detector Configuration > Controller Configuration	
Delay in ms	100 ... 2000 **(500)**

5.5.4.2.1.1.2 Jump to a fixed value

The start value can be set in % steps. The lighting starts with the set value and then goes into regulation.

With the help of group object 56 (start value), the last value of the dimming actuator can be used again as the start value. In this way, the control always starts with the last value approached (Last Level). For this, the parameter “Start value only changeable by external influence” must be activated so that the detector adopts the last manually set value, but not the OFF telegram.

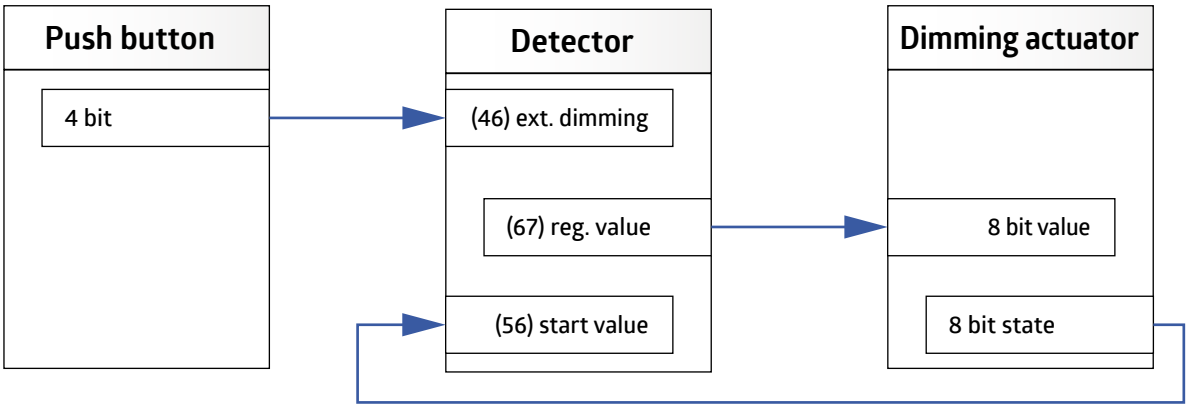

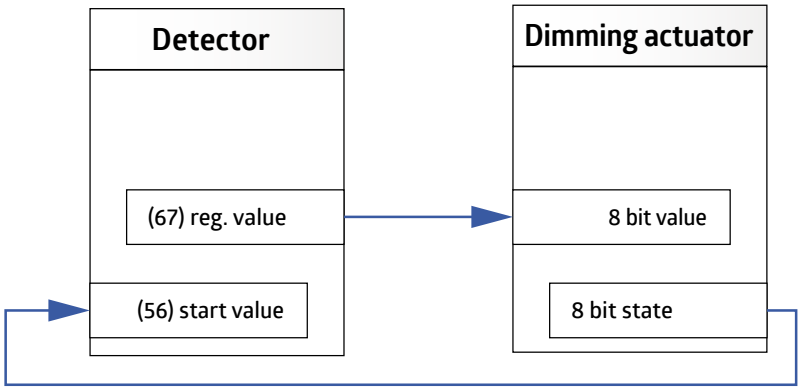

LO: Detector Configuration > Controller Configuration	
Start value in percent (only visible with start behaviour "jump to a fixed value)	0 ... 100 **(50)**

LO: Detector Configuration > Controller Configuration	
Start value only changeable by external influence (only visible with start behaviour "jump to a fixed value")	**deactivated** activated

No.	Name	Function	C	R	W	T	M
56	LO: Input (DPT 5.001)	Start value	X	–	X	–	–

(only visible with start behaviour "jump to a fixed value")

5.5.4.2.1.1.3 Jump to a calculated value

With this setting, the lighting starts with a calculated value. After a correctly completed learning time, this value is close to the set value brightness. After the download or after a learning time that has not been completed correctly, the lighting starts with 50 %.

5.5.4.2.1.1.4 Preset / User Mode (Last Level)

In user mode, the value set with 4-bit dimming is adopted as the new setpoint (last level). For this purpose, the "Start value can only be changed with external influence" parameter can be activated in switching and control mode under the "Control output" -> "Jump to a fixed value" or "Switching output" -> "Value object" tab. Object 56 "Start value" (1 byte) receives the value from the feedback object of the dimmer and "remembers" the value in order to use this value the next time it is switched on.

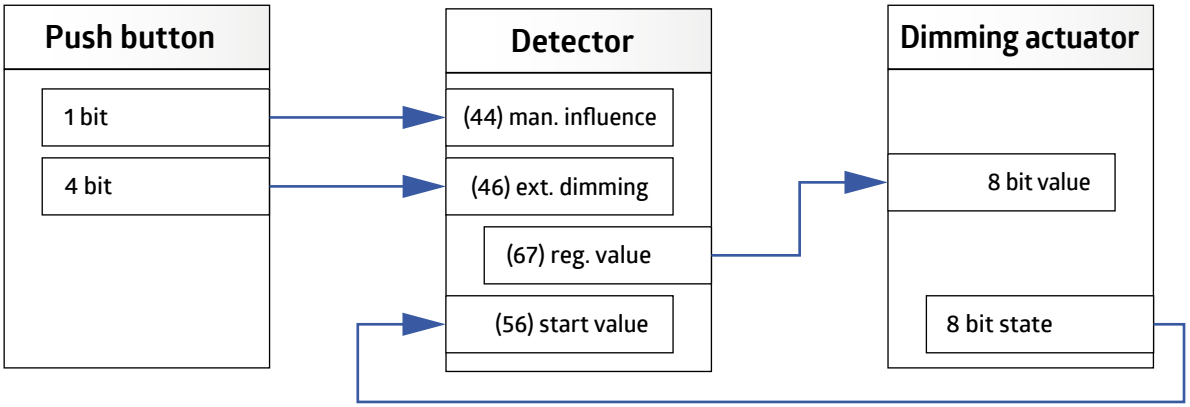

5.5.4.2.1.2 Learning time after starting

The learning time is the time required by the detector to detect the lighting conditions in the room and the time required by the lamp to reach full brightness. The set learning time must elapse once after the download in order to complete the learning process. If the set follow-up time is shorter than the learning time, the follow-up time must be restarted by movement so that the learning process can be properly completed. If the learning process is not completely finished, the value is only approached approximately in the "Soft start" setting. With the setting "Jump to a calculated value", 50 % is approached.

LO: Detector Configuration > Controller Configuration	
Learning time after starting in minutes	1 ... 255 **(2)**

5.5.4.2.1.3 Hysteresis

This is the percentage that is added to the set value to obtain a tolerance between the switch-on and switch-off values. This prevents the lighting from switching on again immediately after it has been switched off because the set value has been exceeded.

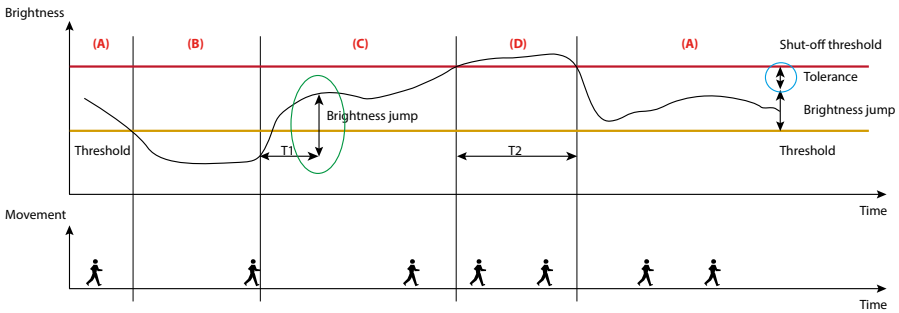

(+) Light value
(+) Daylight influence
(+) Tolerance
(=) Switch-off value

LO: Detector Configuration > Controller Configuration	
Hysteresis in %	5 ... 20 **(10)**

5.5.4.2.1.4 Minimum regulation time, Acceleration of regulation, if dark, Maximum regulation step

The two parameters “minimum regulation time” and “maximum regulation step” together influence the regulation speed of the detector.

The “minimum regulation time” parameter is used to prevent overly fast regulation due to brief changes in light.

If there are very large changes in light in the room, the detector may react with large jumps in the regulation. Under the parameter “maximum regulation step”, the maximum size of a regulation step (in percent) can be defined.

With the parameter “Acceleration of regulation, if dark”, the speed of the regulation can be accelerated by the set factor. This may be necessary if the automatic building shading closes the blinds or roller shutters, resulting in rapid light changes.

LO: Detector Configuration > Controller Configuration	
Minimum regulation time in seconds	1 ... 10 **(1)**

LO: Detector Configuration > Controller Configuration	
Acceleration of regulation, if dark	Factor 1, 2, 4, 8, 16 **(1)**

LO: Detector Configuration > Controller Configuration	
Maximum regulation step in %	1 ... 10 **(1)**

5.5.4.2.1.5 Regulation minimum

With this parameter, the smallest value is set to which regulation is to take place either manually or automatically due to sufficient daylight. If this value <= 10 % is selected, the “switch-off delay at regulation minimum” starts. During this time, the detector monitors the brightness in the room. If it is permanently above the brightness set value, the detector switches the lighting off after the time has elapsed.

If the set value is above 10 %, the light is dimmed to this value if there is sufficient daylight, but it is not switched off. In this case, the light is only switched off after no more movement has been detected for a follow-up time.

If the set value brightness is below the current brightness value, the lighting is not switched on automatically when entering the room. However, this can be done manually by push-button. In the “too bright” state, the lighting is switched on at a setting of <= 10 % at a value of 10 % and switched off again after a fixed period of 15 minutes if the brightness set value is permanently exceeded. With a setting above 10 %, pressing the button in the “too bright” state switches on with the selected value and the daylight-dependent switch-off is deactivated.

LO: Detector Configuration > Controller Configuration	
Regulation minimum in %	1 ... 50 **(1)**

5.5.4.2.1.6 Switch-off delay at regulation minimum

If the set value brightness defined is exceeded, the detector first dims the lighting to the regulation minimum. Now an adjustable period starts during which the exceeding of the set value is monitored. If this remains exceeded for the set duration, the detector switches the lighting off after expiry.

LO: Detector Configuration > Controller Configuration	
Switch-off delay at regulation minimum in minutes	1 ... 255 **(10)**

5.5.4.2.1.7 Waiting time after switching off at control minimum in semi-automatic mode

This parameter only refers to semi-automatic mode and causes the detector to switch the lighting on again automatically after it has been switched off due to increasing daylight if movement is detected and the brightness falls below the threshold again. This is based on the set follow-up time.

LO: Detector Configuration > Controller Configuration	
Waiting period after switch-off at regulation minimum in semi-automatic mode (only visible with a minimum rule of less than/equal to 10)	deactivated
	activated

5.5.4.2.1.8 Offset between regulation value and group x

With this parameter, it is possible to operate up to three continuous rows with an offset and to control them depending on the daylight to ensure uniform illumination of the room.

This function is used in classrooms, for example. The control value is measured in the middle of the room.

Accordingly, the regulation value (object 67, LO: output (DPT 5.001) - regulation value (group near detector)) is the light strip in the middle of the room.

As the intensity of the artificial light decreases due to the daylight, the light strip 3 on the window side is the first to dim down. Thus, a minus offset is specified here. The least amount of daylight penetrates the room depth of continuous row 2 on the wall side. The additional artificial light component for continuous row 2 is therefore higher than that of continuous row 1 in the middle of the room and a positive offset is set.

The proportion of artificial light and thus also the offset value decrease from the wall to the window side. If the regulation rate is below 20% or above 80%, the offset is overridden and the lighting is dimmed evenly.

Example: Offset+/- 15%

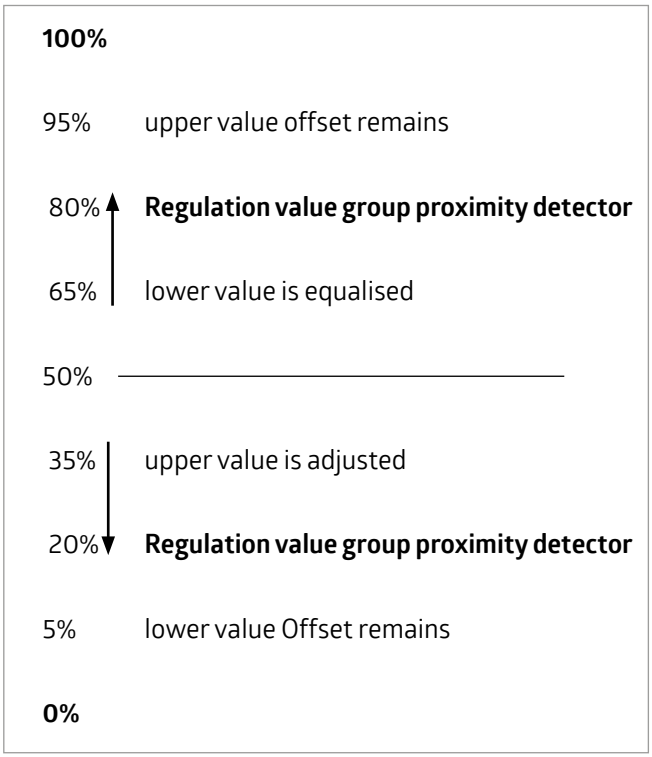

Light group 2 and 3 are designated below as light group X, as the function is identical.

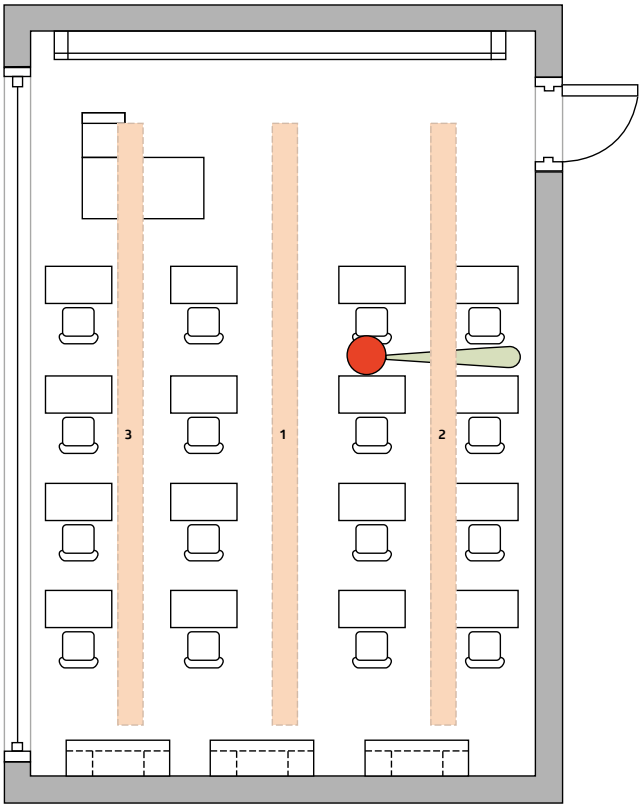

LO: Detector Configuration > Controller Configuration	
Offset between regulation value and group X in %	-99 ... 99 **(0)**

No.	Name	Function	C	R	W	T	M
68	LO: Output (DPT 5.001)	Light group 2	X	–	–	X	–
69	LO: Output (DPT 5.001)	Light group 3	X	–	–	X	–

These group objects are only visible if the "Offset between regulation value and group X " is greater or less than "0" or lock lighting group X is "activated".

The respective group can also be locked so that it is removed from the scheme for the duration of the lock.

LO: Detector Configuration > Controller Configuration	
Lock light group X	**deactivated**
	activated

LO: Detector Configuration > Controller Configuration	
Lock with (only visible with lighting group X lock "activated")	**1**
	0

No.	Name	Function	C	R	W	T	M
41	LO: Input (DPT 1.001)	Lock light group 2	X	–	X	–	–
42	LO: Input (DPT 1.001)	Lock light group 3	X	–	X	–	–

5.5.4.2.1.9 Cycle time

The output value in percent is sent cyclically. In this way, a "heartbeat" can be realised by sending the 1- or 0- telegram accordingly. A failure or loss of the detector can thus be monitored at any time. A duration of 0 seconds corresponds to deactivation of the function.

LO: Detector Configuration > Controller Configuration	
Cycle time in seconds	0 ... 255 **(0)**

5.6 HVACx: Detector configuration

The HVAC channels can only be operated in switching mode. Since most of the parameters correspond to the parameters described for the light output, only those parameters are described where there are differences.

5.6.1 Switching output ➜ Detector sends

For each activated HVAC channel, the "Detector sends" parameter can be defined under the HVACx: Detector configuration ➜ Switching output card. If the parameter is set to "HVAC mode", a telegram is sent to the heating system after movement is detected. The heating system changes the operating mode accordingly. It can be selected whether a telegram is to be sent when starting (when movement is detected) and/or when stopping (at the end of the follow-up time).

HVACx: Detector Configuration > Switching Output	
Detector sends	**Switching object**
	Value object
	HVAC mode

HVACx: Detector Configuration > Switching Output	
Telegram when starting	is not sent
	is sent

HVACx: Detector Configuration > Switching Output	
Telegram when stopping	is not sent
	is sent

5.6.1.1 Switching object

If a telegram is sent when starting or stopping, the value can be set in each case.

HVACx: Detector Configuration > Switching Output	
Value	0 ... 1 **(1)**

No.	Name	Function	C	R	W	T	M
89	HVAC1: Output (DPT 1.001)	Switching	X	–	–	X	–
104	HVAC2: Output (DPT 1.001)	Switching	X	–	–	X	–
119	HVAC3: Output (DPT 1.001)	Switching	X	–	–	X	–

5.6.1.2 Value object

With the "Value object" setting, if a telegram is sent when starting and/or stopping, a defined percentage value can be sent with the HVAC channel. In this way, lighting can be "switched" with dimmed brightness values.

HVACx: Detector Configuration > Switching Output	
Value in%	0 ... 100 **(100)**

No.	Name	Function	C	R	W	T	M
89	HVAC1: Output (DPT 5.001)	Value	X	–	–	X	–
104	HVAC2: Output (DPT 5.001)	Value	X	–	–	X	–
119	HVAC3: Output (DPT 5.001)	Value	X	–	–	X	–

5.6.1.3 HVAC Mode

With this setting, if a telegram is sent when starting and/or stopping, the HVAC mode can be set. An automatic or different modes can be selected. These are:

Automatic

Switching takes place automatically according to the settings in the heating system.

Comfort

The comfort temperature is activated when people are present.

Standby

The temperature is activated in the absence of people.

Economy

The night setback temperature is activated.

Frost/heat protection

The minimum temperature is activated to prevent the pipes from freezing.

HVACx: Detector Configuration > Switching Output	
HVAC mode (only visible with detector sends HVAC mode and telegram when starting)	Automatic (0)
	Comfort (1)
	Standby (2)
	Economy (3)
	Frost / heat protection (4)

HVACx: Detector Configuration > Switching Output	
HVAC mode (only visible with detector sends HVAC mode and telegram when stopping)	Automatic (0)
	Comfort (1)
	Standby (2)
	Economy (3)
	Frost / heat protection (4)

No.	Name	Function	C	R	W	T	M
89	HVAC1: Output (DPT 20.102)	HVAC mode	X	–	–	X	–
104	HVAC2: Output (DPT 20.102)	HVAC mode	X	–	–	X	–
119	HVAC3: Output (DPT 20.102)	HVAC mode	X	–	–	X	–

5.6.2 Switching output → Send colour value

If the parameter "Send colour value" is selected for "Switching output" on the HVAC channel, a colour change can be caused when motion is detected and after the end of the follow-up time. The corresponding colour can be selected in the colour chart.

HVACx: Detector Configuration > Switching Output	
Send colour value	**is not sent**
	is sent

If a colour value is sent, it can be selected at will.

HVACx: Detector Configuration > Switching Output	
Colour value when starting	RGB **(R)**

HVACx: Detector Configuration > Switching Output	
Colour value when stopping	RGB **(G)**

5.7 SL: Slave configuration

Since most of the parameters correspond to the parameters described for the light output, only those parameters are described which are different.

5.7.1 Settings → Locking Time/Reset

To keep the telegram load on the KNX bus low, the telegrams of the slave device are sent at a certain interval. The duration between the telegrams can be defined by the parameter in seconds and minutes. If the master device switches off at the end of the follow-up time, the locking time of the slave device must also be reset so that the information can be immediately sent to the master device when the next time movement is detected.

Slave Configuration > Settings	
Locking time	00:01...60:00 mm:ss **(04:00)**

Slave device:

No.	Name	Function	C	R	W	T	M
14	SL: Input (DPT 1.002)	Reset	X	–	–	X	–

Master device:

No.	Name	Function	C	R	W	T	M
76	LO: Output (DPT 1.002)	Reset	X	–	–	X	–
91	HVAC1: Output (DPT 1.002)	Reset	X	–	–	X	–
106	HVAC2: Output (DPT 1.002)	Reset	X	–	–	X	–
121	HVAC3: Output (DPT 1.002)	Reset	X	–	–	X	–

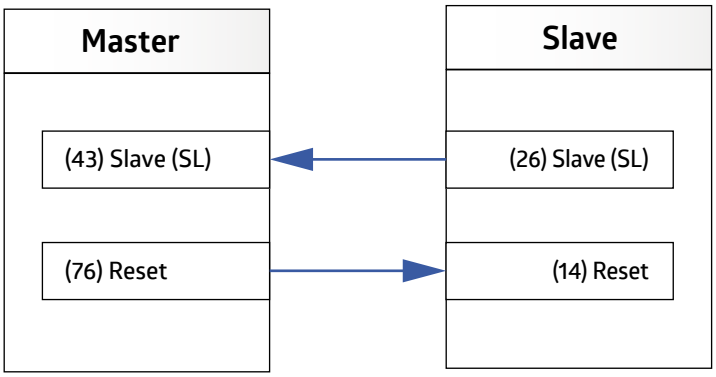

6 List of data point types

General

No.	Name	Function	C	R	W	T	M
1	General: Input (DPT 1.001)	Test mode	X	–	X	–	–
2	General: Input (DPT 1.001)	Central switch OFF	X	–	X	–	–
3	General: Input (DPT 1.001)	Activation LED motion/IR	X	–	X	–	–
4	General: Input (DPT 1.001)	Activation LED sound sensor	X	–	X	–	–
5	General: Input (DPT232.600)	Ambient light RGB	X	–	X	–	–

Light sensor

No.	Name	Function	C	R	W	T	M
8	Light sensor input (DPT 9.004)	Brightness	X	–	X	X	X
9	Light sensor input (DPT 1.010)	Learning Start/Stop	X	–	X	–	–
10	Light sensor output (DPT 9.004)	Brightness	X	–	–	X	–

Temperature

No.	Name	Function	C	R	W	T	M
12	Temperature sensor output (DPT 9.001)	Temperature	X	–	–	X	–

Slave

No.	Name	Function	C	R	W	T	M
14	SL: Input (DPT 1.002)	Reset	X	–	X	–	–
15	SL: Input (DPT 1.001)	Activation sound sensor	X	–	X	–	–
16	SL: Input (DPT 1.001)	Activation night light	X	–	X	–	–
17	SL: Input (DPT 1.001)	Activation orientation light	X	–	X	–	–
19	SL: Input (DPT 5.001)	Sensitivity sensors	X	–	X	–	–
19	SL: Input (DPT 5.001)	Sensitivity sensor 1 / Aleum sensor creep protection	X	–	X	–	–
20	SL: Input (DPT 5.001)	Sensitivity sensor 2 / Aleum sensor 2 front view centre	X	–	X	–	–
21	SL: Input (DPT 5.001)	Sensitivity sensor 3 / Aleum sensor 3 front view right	X	–	X	–	–
22	SL: Input (DPT 5.001)	Sensitivity sensor 4 / Aleum sensor 1 front view left	X	–	X	–	–
23	SL: Input (DPT 1.002)	LED control 1	X	–	X	–	–
24	SL: Input (DPT 1.002)	LED control 2	X	–	X	–	–
25	SL: Input (DPT 1.002)	LED control 3	X	–	X	–	–
26	SL: Output (DPT 1.002)	Slave (SL)	X	–	–	X	–

HCL

No.	Name	Function	C	R	W	T	M
30	HCL: Input (DPT 10.001)	Time	X	–	X	–	–
30	HCL: Input (DPT 19.001)	Time/date	X	–	X	–	–
31	HCL: Input (DPT 17.001)	Scene	X	–	X	–	–
32	HCL: Input (DPT 1.001)	Lock	X	–	X	–	–
33	HCL: Input (DPT 9.004)	Brightness shift	X	–	X	–	–
34	HCL: Output (DPT 7.600)	Colour temperature	X	–	–	X	–
35	HCL: Output (DPT 9.001)	Brightness value	X	–	X	–	–

Light output

No.	Name	Function	C	R	W	T	M
40	LO: Input (DPT 1.001)	Lock	X	–	X	–	–
41	LO: Input (DPT 1.001)	Lock light group 2	X	–	X	–	–
42	LO: Input (DPT 1.001)	Lock light group 3	X	–	X	–	–
43	LO: Input (DPT 1.002)	Slave (SL)	X	–	X	–	–
44	LO: Input (DPT 1.001)	Manual influence	X	–	X	–	–
45	LO: Input (DPT 1.001)	External switching	X	–	X	–	–
46	LO: Input (DPT 3.007)	External dimming	X	–	X	–	–
47	LO: Input (DPT 5.001)	External value	X	–	X	–	–
48	LO: Input (DPT 7.006)	Follow-up time	X	–	X	–	–
49	LO: Input (DPT 9.004)	Set value 1	X	–	X	–	–
50	LO: Input (DPT 1.002)	Change set value 1=(0), set value 2=(1)	X	–	X	–	–
51	LO: Input (DPT 1.002)	Change set value 1=(0), fixed value=(1)	X	–	X	–	–
52	LO: Input (DPT 1.010)	Burn-in start/stop	X	–	X	–	–
53	LO: Input (DPT 1.010)	Call up remaining burn-in time	X	–	X	–	–
54	LO: Input (DPT 1.002)	Change operation mode FA= (1), SA= (0)	X	–	X	–	–
55	LO: Input (DPT 1.001)	Activation sound sensor	X	–	X	–	–
56	LO: Input (DPT 5.001)	Start value	X	–	X	–	–
57	LO: Input (DPT 5.001)	Stop value	X	–	X	–	–
58	LO: Input (DPT 1.001)	Activation night light	X	–	X	–	–
59	LO: Input (DPT 1.001)	Activation orientation light	X	–	X	–	–
60	LO: Input (DPT 1.002)	Change projector= (0), corridor= (1)	X	–	X	–	–
61	LO: Input (DPT 5.001)	Sensitivity sensors	X	–	X	–	–
61	LO: Input (DPT 5.001)	Sensitivity sensor 1 / Aleum sensor creep protection	X	–	X	–	–
62	LO: Input (DPT 5.001)	Sensitivity sensor 2 / Aleum sensor 2 front view centre	X	–	X	–	–
63	LO: Input (DPT 5.001)	Sensitivity sensor 3 / Aleum sensor 3 front view right	X	–	X	–	–
64	LO: Input (DPT 5.001)	Sensitivity sensor 4 / Aleum sensor 1 front view left	X	–	X	–	–
65	LO: Output (DPT 1.001)	Lock feedback	X	–	–	X	–
66	LO: Output (DPT 3.007)	Relative dimming	X	–	–	X	–
67	LO: Output (DPT 5.001)	Regulation value (group near detector)	X	–	X	X	X
67	LO: Output (DPT 1.001)	Switching	X	–	–	X	–
67	LO: Output (DPT 5.001)	Value	K	–	–	X	–
68	LO: Output (DPT 1.001)	Switching	K	–	–	X	–
68	LO: Output (DPT 5.001)	Light group 2	X	–	–	X	–
69	LO: Output (DPT 5.001)	Light group 3	X	–	–	X	–
70	LO: Output (DPT 232.600)	Colour value RGB	X	–	–	X	–
71	LO: Output (DPT 7.600)	Remaining burn-in time	X	–	–	X	–
72	LO: Output (DPT 1.002)	LED control 1	X	–	–	X	–
73	LO: Output (DPT 1.002)	LED control 2	X	–	–	X	–
74	LO: Output (DPT 1.002)	LED control 3	X	–	–	X	–
76	LO: Output (DPT 1.002)	Reset	X	–	–	X	–

HVAC 1

No.	Name	Function	C	R	W	T	M
77	HVAC1: Input (DPT 1.001)	Lock	X	–	X	–	–
78	HVAC1: Input (DPT 1.002)	Slave (SL)	X	–	X	–	–
79	HVAC1: Input (DPT 1.001)	Manual influence	X	–	X	–	–
80	HVAC1: Input (DPT 7.006)	Follow-up time	X	–	X	–	–
81	HVAC1: Input (DPT 9.004)	Brightness threshold	X	–	X	–	–
82	HVAC1: Input (DPT 1.002)	Change operating mode FA=(1), SA=(0)	X	–	X	–	–
83	HVAC1: Input (DPT 1.001)	Activation sound sensor	X	–	X	–	–
84	HVAC1: Input (DPT 5.001)	Sensitivity sensors	X	–	X	–	–
84	HVAC1: Input (DPT 5.001)	Sensitivity sensor 1 / Aleum sensor creep protection	X	–	X	–	–
85	HVAC1: Input (DPT 5.001)	Sensitivity sensor 2 / Aleum sensor 2 front view centre	X	–	X	–	–
86	HVAC1: Input (DPT 5.001)	Sensitivity sensor 3 / Aleum sensor 3 front view right	X	–	X	–	–
87	HVAC1: Input (DPT 5.001)	Sensitivity sensor 4 / Aleum sensor 1 front view left	X	–	X	–	–
88	HVAC1: Output (DPT 1.001)	Lock feedback	X	–	–	X	–
89	HVAC1: Output (DPT 1.001)	Switching	X	–	–	X	–
90	HVAC1: Output (DPT 232.600)	Colour value RGB	X	–	–	X	–
91	HVAC1: Output (DPT 1.002)	Reset	X	–	–	X	–

HVAC 2

No.	Name	Function	C	R	W	T	M
92	HVAC2: Input (DPT 1.001)	Lock	X	–	X	–	–
93	HVAC2: Input (DPT 1.002)	Slave (SL)	X	–	X	–	–
94	HVAC2: Input (DPT 1.001)	Manual influence	X	–	X	–	–
95	HVAC2: Input (DPT 7.006)	Follow-up time	X	–	X	–	–
96	HVAC2: Input (DPT 9.004)	Brightness threshold	X	–	X	–	–
97	HVAC2: Input (DPT 1.002)	Change operating mode FA=(1), SA=(0)	X	–	X	–	–
98	HVAC2: Input (DPT 1.001)	Activation sound sensor	X	–	X	–	–
99	HVAC2: Input (DPT 5.001)	Sensitivity sensors	X	–	X	–	–
99	HVAC2: Input (DPT 5.001)	Sensitivity sensor 1 / Aleum sensor creep protection	X	–	X	–	–
100	HVAC2: Input (DPT 5.001)	Sensitivity sensor 2 / Aleum sensor 2 front view centre	X	–	X	–	–
101	HVAC2: Input (DPT 5.001)	Sensitivity sensor 3 / Aleum sensor 3 front view right	X	–	X	–	–
102	HVAC2: Input (DPT 5.001)	Sensitivity sensor 4 / Aleum sensor 1 front view left	X	–	X	–	–
103	HVAC2: Output (DPT 1.001)	Lock feedback	X	–	–	X	–
104	HVAC2: Output (DPT 1.001)	Switching	X	–	–	X	–
105	HVAC2: Output (DPT 232.600)	Colour value RGB	X	–	–	X	–
106	HVAC2: Output (DPT 1.002)	Reset	X	–	–	X	–

HVAC 3

No.	Name	Function	C	R	W	T	M
107	HVAC3: Input (DPT 1.001)	Lock	X	–	X	–	–
108	HVAC3: Input (DPT 1.002)	Slave (SL)	X	–	X	–	–
109	HVAC3: Input (DPT 1.001)	Manual influence	X	–	X	–	–
110	HVAC3: Input (DPT 7.006)	Follow-up time	X	–	X	–	–
111	HVAC3: Input (DPT 9.004)	Brightness threshold	X	–	X	–	–
112	HVAC3: Input (DPT 1.002)	Change operating mode FA=(1), SA=(0)	X	–	X	–	–
113	HVAC3: Input (DPT 1.001)	Activation sound sensor	X	–	X	–	–
114	HVAC3: Input (DPT 5.001)	Sensitivity sensors	X	–	X	–	–
114	HVAC3: Input (DPT 5.001)	Sensitivity sensor 1 / Aleum sensor creep protection	X	–	X	–	–
115	HVAC3: Input (DPT 5.001)	Sensitivity sensor 2 / Aleum sensor 2 front view centre	X	–	X	–	–
116	HVAC3: Input (DPT 5.001)	Sensitivity sensor 3 / Aleum sensor 3 front view right	X	–	X	–	–
117	HVAC3: Input (DPT 5.001)	Sensitivity sensor 4 / Aleum sensor 1 front view left	X	–	X	–	–
118	HVAC3: Output (DPT 1.001)	Lock feedback	X	–	–	X	–
119	HVAC3: Output (DPT 1.001)	Switching	X	–	–	X	–
120	HVAC3: Output (DPT 232.600)	Colour value RGB	X	–	–	X	–
121	HVAC3: Output (DPT 1.002)	Reset	X	–	–	X	–

Push-button PB1 (Indoor 140L)

No.	Name	Function	C	R	W	T	M
122	PB1: Output (DPT 1.001)	Switching	X	–	X	X	–
122	PB1: Output (DPT 1.007)	Slats stop/step command	X	–	X	X	–
122	PB1: Output (DPT 18.001)	Scene	X	–	X	X	–
122	PB1: Output (DPT 2.001)	Forced operation	X	–	–	X	–
122	PB1: Output (DPT 5.001)	Value	X	–	–	X	–
123	PB1: Output (DPT 3.007)	Dimming command	X	–	X	X	–
124	PB1: Output (DPT 5.001)	Value	K	–	–	X	–
125	PB1: Input (DPT 1.001)	Lock	X	–	X	–	–
126	PB1: Input (DPT 1.001)	Switching feedback	X	–	X	–	–
126	PB1: Input (DPT 1.001)	Status feedback	X	–	X	–	–
126	PB1: Input (DPT 1.008)	Feedback Up/Down	X	–	X	–	–

Push-button PB2 (Indoor 140L)

No.	Name	Function	C	R	W	T	M
127	PB2: Output (DPT 1.001)	Switching	X	–	X	X	–
127	PB2: Output (DPT 1.007)	Slats stop/step command	X	–	X	X	–
127	PB2: Output (DPT 18.001)	Scene	X	–	X	X	–
127	PB2: Output (DPT 2.001)	Forced operation	X	–	–	X	–
127	PB2: Output (DPT 5.001)	Value	X	–	–	X	–
128	PB2: Output (DPT 3.007)	Dimming command	X	–	X	X	–
129	PB2: Output (DPT 5.001)	Value	K	–	–	X	–
130	PB2: Input (DPT 1.001)	Lock	X	–	X	–	–
131	PB2: Input (DPT 1.001)	Switching feedback	X	–	X	–	–
131	PB2: Input (DPT 1.001)	Status feedback	X	–	X	–	–
131	PB2: Input (DPT 1.008)	Feedback Up/Down	X	–	X	–	–

Button IR1

No.	Name	Function	C	R	W	T	M
132	IR1: Output (DPT 1.001)	Switching	X	–	X	X	–
132	IR1: Output (DPT 1.007)	Slats stop/step command	X	–	X	X	–
132	IR1: Output (DPT 18.001)	Scene	X	–	X	X	–
132	IR1: Output (DPT 2.001)	Forced operation	X	–	–	X	–
132	IR1: Output (DPT 5.001)	Value	X	–	–	X	–
133	IR1: Output (DPT 3.007)	Dimming command	X	–	X	X	–
134	IR1: Output (DPT 5.001)	Value	X	–	–	X	–
135	IR1: Input (DPT 1.001)	Lock	X	–	X	–	–
136	IR1: Input (DPT 1.001)	Toggle feedback	X	–	X	–	–
136	IR1: Input (DPT 1.001)	Status feedback	X	–	X	–	–
136	IR1: Input (DPT 1.008)	Feedback Up/Down	X	–	X	–	–

Button IR2

No.	Name	Function	C	R	W	T	M
137	IR2: Output (DPT 1.001)	Switching	X	–	X	X	–
137	IR2: Output (DPT 1.007)	Slats stop/step command	X	–	X	X	–
137	IR2: Output (DPT 18.001)	Scene	X	–	X	X	–
137	IR2: Output (DPT 2.001)	Forced operation	X	–	–	X	–
137	IR2: Output (DPT 5.001)	Value	X	–	–	X	–
138	IR2: Output (DPT 3.007)	Dimming command	X	–	X	X	–
139	IR2: Output (DPT 5.001)	Value	X	–	–	X	–
130	IR2: Input (DPT 1.001)	Lock	X	–	X	–	–
141	IR2: Input (DPT 1.001)	Switch feedback	X	–	X	–	–
141	IR2: Input (DPT 1.001)	Status feedback	X	–	X	–	–
141	IR2: Input (DPT 1.008)	Feedback Up/Down	X	–	X	–	–

Button IR3

No.	Name	Function	C	R	W	T	M
142	IR3: Output (DPT 1.001)	Switching	X	–	X	X	–
142	IR3: Output (DPT 1.007)	Slats stop/step command	X	–	X	X	–
142	IR3: Output (DPT 18.001)	Scene	X	–	X	X	–
142	IR3: Output (DPT 2.001)	Forced operation	X	–	–	X	–
142	IR3: Output (DPT 5.001)	Value	X	–	–	X	–
143	IR3: Output (DPT 3.007)	Dimming command	X	–	X	X	–
144	IR3: Output (DPT 5.001)	Value	X	–	–	X	–
145	IR3: Input (DPT 1.001)	Lock	X	–	X	–	–
146	IR3: Input (DPT 1.001)	Switch feedback	X	–	X	–	–
146	IR3: Input (DPT 1.001)	Status feedback	X	–	X	–	–
146	IR3: Input (DPT 1.008)	Feedback Up/Down	X	–	X	–	–

Button IR4

No.	Name	Function	C	R	W	T	M
147	IR4: Output (DPT 1.001)	Switching	X	–	X	X	–
147	IR4: Output (DPT 1.007)	Slats stop/step command	X	–	X	X	–
147	IR4: Output (DPT 18.001)	Scene	X	–	X	X	–
147	IR4: Output (DPT 2.001)	Forced operation	X	–	–	X	–
147	IR4: Output (DPT 5.001)	Value	X	–	–	X	–
148	IR4: Output (DPT 3.007)	Dimming command	X	–	X	X	–
149	IR4: Output (DPT 5.001)	Value	X	–	–	X	–
150	IR4: Input (DPT 1.001)	Lock	X	–	X	–	–
151	IR4: Input (DPT 1.001)	Switching feedback	X	–	X	–	–
151	IR4: Input (DPT 1.001)	Status feedback	X	–	X	–	–
151	IR4: Input (DPT 1.008)	Feedback Up/Down	X	–	X	–	–

Button IR5

No.	Name	Function	C	R	W	T	M
152	IR5: Output (DPT 1.001)	Switching	X	–	X	X	–
152	IR5: Output (DPT 1.007)	Slats stop/step command	X	–	X	X	–
152	IR5: Output (DPT 18.001)	Scene	X	–	X	X	–
152	IR5: Output (DPT 2.001)	Forced operation	X	-	-	X	-
152	IR5: Output (DPT 5.001)	Value	X	-	-	X	-
153	IR5: Output (DPT 3.007)	Dimming command	X	-	X	X	-
154	IR5: Output (DPT 5.001)	Value	X	-	-	X	-
155	IR5: Input (DPT 1.001)	Lock	X	-	X	-	-
156	IR5: Input (DPT 1.001)	Switching feedback	X	-	X	-	-
156	IR5: Input (DPT 1.001)	Status feedback	X	-	X	-	-
156	IR5: Input (DPT 1.008)	Feedback Up/Down	X	-	X	-	-

Logic functions

No.	Name	Function	C	R	W	T	M
157	L1: Input (depending on DPT)	Input 1	X	–	X	–	–
158	L1: Input (depending on DPT)	Input 2	X	–	X	–	–
159	L1: Input (depending on DPT)	Input 3	X	–	X	–	–
160	L1: Output (depending on DPT)	Output	X	–	–	X	–
161	L2: Input (depending on DPT)	Input 1	X	–	X	–	–
162	L2: Input (depending on DPT)	Input 2	X	–	X	–	–
163	L2: Input (depending on DPT)	Input 3	X	–	X	–	–
164	L2: Output (depending on DPT)	Output	X	–	–	X	–

Presence simulation

No.	Name	Function	C	R	W	T	M
165	SIMU: Input (DPT 1.010)	Presence simulation start/stop	X	–	X	–	–

7 Diagnosis / Troubleshooting

NOTE	
!	**Diagnosis / troubleshooting via the ETS!** ➜ For diagnosis / troubleshooting, use the corresponding functions of the ETS, e.g. ■ Group monitor ■ Bus monitor ■ Line scan

:

8 Service / Support

8.1 Manufacturer's warranty

The company B.E.G. Brück Electronic GmbH grants a warranty in accordance with the warranty conditions, which you can download from the website at https://www.B.E.G.-luxomat.com/service/downloads/.

8.1.1 Product code

The product is provided with a product code which enables the product to be traced in the event of a guarantee/complaint.

The product code is lasered on the housing. For the exact placement, please refer to the enclosed manual.

8.2 Contact details

Service hotline:

+49 (0)2266 90121-0

Monday to Thursday 8.00 to 16.00 (UTC+1)

Friday 8.00 to 15.00 (UTC+1)

E-mail:

support@beg.de

Return address for repairs:

Contact your B.E.G. branch or agency.

You can find the contact details at https://www.beg-luxomat.com/en-in/service/service-points/.

Or contact directly

B.E.G. Brück Electronic GmbH

Gerberstrasse 33

51789 Lindlar

GERMANY

Appl_MAN_KNX-Gen-7_en_V8 ■ 270526

B.E.G. Brück Electronic GmbH
Gerberstraße 33
51789 Lindlar

T +49 (0) 2266 90121-0
F +49 (0) 2266 90121-50

support@beg.de
beg-luxomat.com