B.E.G. LUXOMAT®

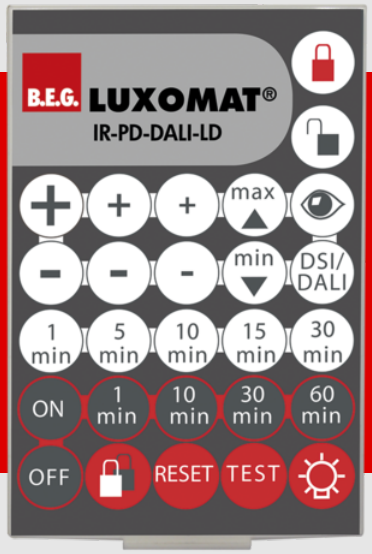

IR-PD-DALI-LD

Prod.No. 92652 EAN: 4007529926527

Infrared remote control for conveniently setting or changing parameters

Especially for long distances

Comes complete with a wall bracket

Order data

Designation	Colour	Art.No
IR-PD-DALI-LD	-	92652

Accessories

Designation	Colour	Art.No
Wall holder IR-RC	white	92100

Technical data

Battery:	3 x 1.5 V Micro AAA (not included)
Dimensions:	83 x 53 x 17 mm
Material color:	-
Transmit range:	**clouded/dark:** max. 12 m

Product information

Infrared remote control for conveniently setting or changing parameters

Especially for long distances

Comes complete with a wall bracket

Easy programming of following occupancy detector range:
- PD2-M-DALI/DSI
- PD4-M-DALI/DSI
- PD4-M-DALI/DSI-K
- PD9-M-DALI/DSI
- PD9-M-DALI/DSI-GH
- PD4-M-DUO-DALI

The functions of the remote control are described with the respective device

Suitable for: 92279, 92938, 93452, 93453, 93455, 93459, 93460, 93461, 93463, 93469, 93470, ...

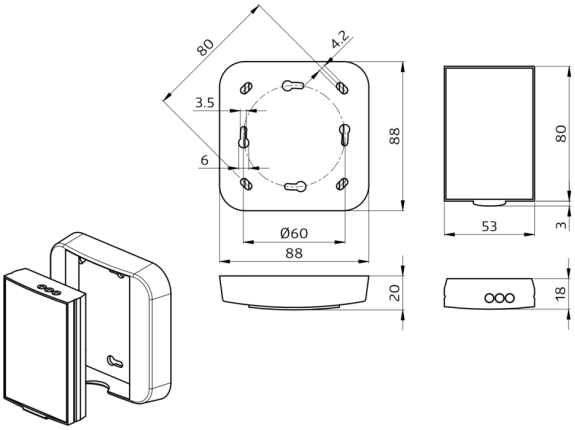
80
4.2
3.5
6
88
Ø60
88
80
53
3
20
18

Accessories



Wall holder IR-RC
Art.No: 92100

Dimensions: 63 x 30 x 19 mm
Housing: polycarbonate, UV-resistant
Material color: white