B.E.G. LUXOMAT®

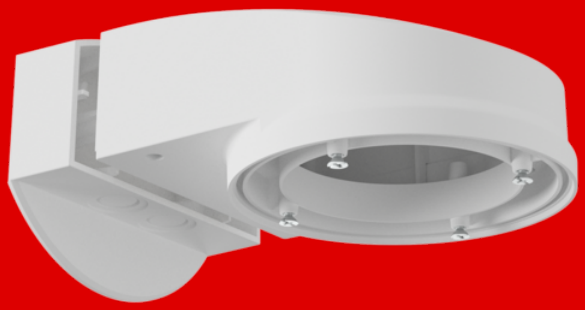

# Wall holder PD2N/4N Typ A

93702 EAN: 4007529937028

Fixture for wall mounting of compatible B.E.G. ceiling occupancy detectors

Including screws for mounting a compatible B.E.G. ceiling occupancy detector

Suitable for wall mounting with rear cable feed

## Order data

| Designation | Colour | Art.No |
|---|---|---|
| Wall holder PD2N/4N Typ A | traffic white | 93702 |

## Technical data

| | |
|---|---|
| Dimensions: | 133 x 106 x 66 mm |
| Degree / class of protection: | IP54 / Class II |
| Housing: | polycarbonate, UV-resistant |
| Material color: | traffic white, similar to RAL9016 |

## Product information

Fixture for wall mounting of compatible B.E.G. ceiling occupancy detectors

Including screws for mounting a compatible B.E.G. ceiling occupancy detector

Suitable for wall mounting with rear cable feed

Surface-mounted base included

Enables lateral cable feed

Enables mounting on common flush-mounted boxes

available in various colours

For usability/compatibility of the accessories please refer to the descriptions of the main articles

Suitable for: 93240, 93241, 93340, 93351, 93353, 93377, 93452, 93453, 93455, 93460, 93461, 93463, 93473, 93474, 93476, 93477, 93510, 93511, 93513, 93514, 93515, 93516, 93517, 93533, 93534, 93580, ...

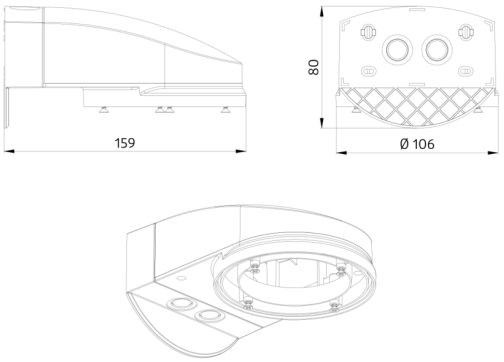
159
80
Ø 106