B.E.G. LUXOMAT®

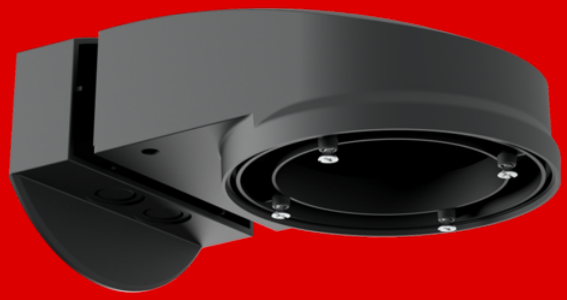

Wall holder PD2N/4N Typ A

93701 EAN: 4007529937011

Fixture for wall mounting of compatible B.E.G. ceiling occupancy detectors

Including screws for mounting a compatible B.E.G. ceiling occupancy detector

Suitable for wall mounting with rear cable feed

Order data

Designation	Colour	Art.No
Wall holder PD2N/4N Typ A	anthracite	93701

Technical data

Dimensions:	133 x 106 x 66 mm
Degree / class of protection:	IP54 / Class II
Housing:	polycarbonate, UV-resistant
Material color:	anthracite, similar to RAL7016

Product information

Fixture for wall mounting of compatible B.E.G. ceiling occupancy detectors

Including screws for mounting a compatible B.E.G. ceiling occupancy detector

Suitable for wall mounting with rear cable feed

Surface-mounted base included

Enables lateral cable feed

Enables mounting on common flush-mounted boxes

available in various colours

For usability/compatibility of the accessories please refer to the descriptions of the main articles

Suitable for: 93240, 93241, 93340, 93351, 93353, 93377, 93452, 93453, 93455, 93460, 93461, 93463, 93473, 93474, 93476, 93477, 93510, 93511, 93513, 93514, 93515, 93516, 93517, 93533, 93534, 93580, ...

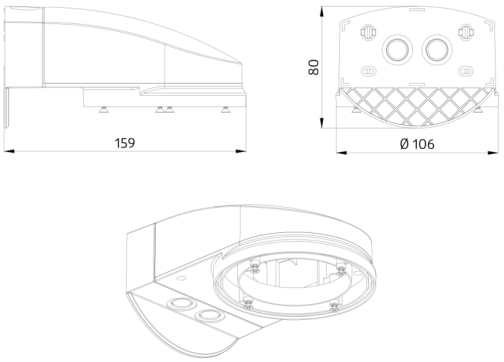
159
80
Ø 106