B.E.G. LUXOMAT® net



WS-VOC-HVAC-KNX

93806 EAN: 4007529938063

KNX Wall-Mounted Air Quality Sensor (VOC) with integrated temperature controller, PI, two-point, and PWM control, as well as a multicolor air quality indicator.

Order data

Designation	Colour	Art.No
WS-VOC-HVAC-KNX	white	93806

Accessories

Designation	Colour	Art.No
Frame IP20 Indoor 140-L	oyster white	94344
Frame IP20 Indoor 140-L	pure white	94343
Frame IP20 Indoor 140-L	pure white	94342
Frame IP20 Indoor 140-L	anthracite	94341

Technical data

Voltage:	via KNX BUS
Dimensions:	55 x 55 x 26 mm
Typ. power input:	12 mA
Degree / class of protection:	IP20 / Class III
Ambient temperature:	-5 °C to +45 °C
Housing:	Polycarbonate
Material color:	white
Display elements:	1 x Programming LED, red 2 x Traffic light LED, red/yellow/green 1 x LED, red/blue 1 x LED, green
Manual operation:	Programming button, push button for comfort function, Potentiometer for setpoint adjustment
KNX TP 256:	Yes
Connections and wires:	KNX bus terminal black/red

Product information

Temperature controller and VOC (volatile organic compounds) sensor for KNX bus

Temperature control: PI controller (continuous), 2-step controller % , 2-step switching, PWM

Preset temperature curves for different heating/cooling systems

Additional heating/cooling stage can be activated

Various prioritised operating modes (Comfort, Standby, Eco, frost/heat protection)

Extension of the duration for the comfort temperature via button (green indicator)

Setpoint limitation (temperature) via outdoor temperature possible

Dew point determination

Feedback as bit, byte or RHCC format

Indicator heating /cooling (red/blue)

Air quality control: PI controller (continuous), 2-step controller % , 2-step switching

Air quality Measuring method VOC, output VOC or CO2

Regulation or stage mode

Air humidity control: PI controller (continuous), 2-step controller % , 2-step switching

Adjustment of control values via rotary knob or object

Output of temperature (°C), air quality (ppm) and relative humidity (%) to the bus

Indicator (traffic light) for air quality and humidity (green, yellow, red)

Four limit values each for air humidity and quality

Suitable for switch ranges 55x55

Adapter for switch ranges 64x64 included

With integrated bus coupler

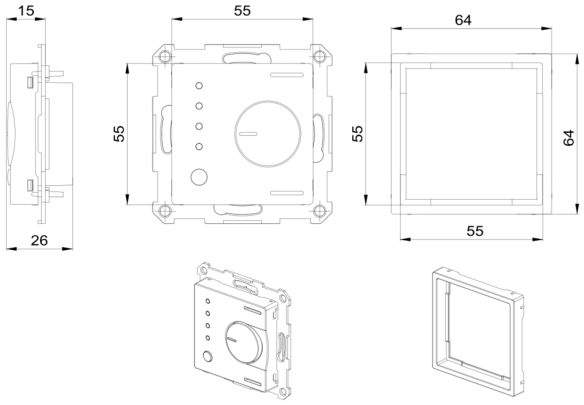
15
55
64
55
55
64
26
55

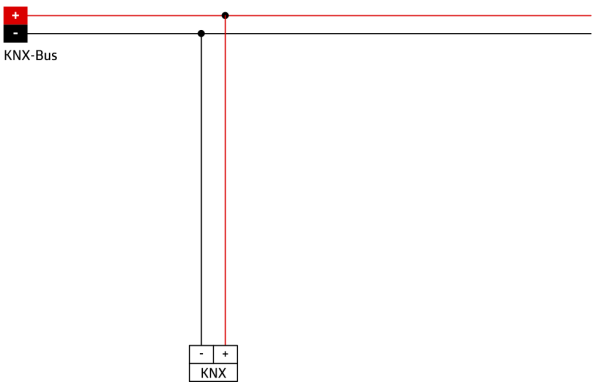
+
-
KNX-Bus
-
+
KNX

Accessories



Frame IP20 Indoor 140-L
Art.No: 94344

Dimensions: 88 x 88 mm, Inside dimension: 63 x 63 mm
Degree / class of protection: IP20 / Class II
Material color: oyster white mat, similar to RAL1013



Frame IP20 Indoor 140-L
Art.No: 94341

Dimensions: 88 x 88 mm, Inside dimension: 63 x 63 mm
Degree / class of protection: IP20 / Class II
Material color: anthracite mat, similar to RAL7021



Frame IP20 Indoor 140-L
Art.No: 94343

Dimensions: 88 x 88 mm, Inside dimension: 63 x 63 mm
Degree / class of protection: IP20 / Class II
Material color: pure white mat, similar to RAL9010



Frame IP20 Indoor 140-L
Art.No: 94342

Dimensions: 88 x 88 mm, Inside dimension: 63 x 63 mm
Degree / class of protection: IP20 / Class II
Material color: pure white glossy, similar to RAL9010