B.E.G. LUXOMAT® net



ViSTATION

93335 EAN: 4007529933358

Local web server for browser-based visualization and control of KNX systems without the cloud, including a license for up to 200 devices; modular and expandable with additional licenses.

Order data

Designation	Colour	Art.No
ViSTATION	-	93335

Accessories

Designation	Colour	Art.No
FU-VIS/FBLOCK-CUA		99175
FU-VIS/KNX-200		99170
FU-VIS/MQTT-CUA		99172
FU-VIS/MQTT-200		99171
FU-VIS/KNX-CUA		99176
FU-VIS/REMOTE-12		99173
FU-VIS/FBLOCK-10		99174

Technical data

Voltage:	5 V DC
Dimensions:	90 x 72 x 64 mm (4 TE)
Power consumption:	max. 5 W
Degree / class of protection:	IP20 / Class II
Product type:	Hardware
Ambient temperature:	0 °C to +45 °C
Housing:	Polyamide, UV-resistant
Material color:	-
Connections and wires:	Ethernet/LAN

Product information

Web server for visualisation of KNX installations

Highlights:
Visualisation solution without cloud, via IP network (LAN/WLAN) / KNX IP Secure
Create projects on the PC in the office and load onto customer ViStation
Operation via most web browsers, such as Chromium Browser (Chrome, Edge, many smartphone browsers), Safari, Mozilla Firefox or via APP (Windows, Android, iOS)

Scalable:
Modular system via licence upgrades (on request)
Configuration as required (number of devices, additional functions, ...)
ViStation is supplied with a licence for up to 200 devices
Device upgrade in steps of 200 up to a maximum of 1600 devices
Function upgrades or software extensions available as licences. Software extensions available as licences
Simple remote access without user firewall configuration via B.E.G. Cloud (fee-based service)
Large projects with more than 1600 KNX devices via Windows ViSTATION (on request)

Quickly set up:
Visualisation of a typical detached house is created in approx. 30 minutes, even without prior knowledge
Import the esf file generated from the ETS (OPC export)
Assign group addresses to the predefined ‘virtual KNX devices’ (dimmers, blinds, ...)
Adjust the symbol for the imported devices in the created floor/room

Ground plan and/or tile view:
New design, selectable in bright mode or dark mode
Tile view is automatically created in every project
Responsive tile view, automatically adapts to the screen size
Floor plan view if required
Floor plan view with zoom function
Floor plans can be imported and scaled as image files
Switch from floor plan to tile view at any time
Over 130 device and alarm symbols can be selected for each floor plan and tile
Any number of rooms and floors can be created

Functions:
Light control (dimming, switching)
Roller shutter/blind control
Heating/air conditioning/ventilation control
Media playback control via KNX
Function block freely selectable from logic, timer, scene, etc. (1 included, additional ones can be unlocked with a licence)
Password-protected switching
Alarm display
Measurement value display
Plug & play monitoring with trend display of all data (e.g. energy, switching states)
Trend recording over several years
Any number of weekly switching times with calendar function
Scheduler with various astro functions and annual calendar

Integration of IP cameras (RTSP)

Functions:
Control of light (dimming, switching)
Control of roller shutters/blinds
Control of heating / air conditioning / ventilation
Control of media playback via KNX
Displaying alarms
Display of measured values
Plug & Play monitoring with trend display of all data (e.g. energy, switching states)
Trend recording over several years
Any number of weekly switching times with calendar function
Scheduler with various astro functions and annual calendar
Integration of IP cameras (RTSP)

General:
PDF status reports via e-mail, adjustable sending cycle
Project backup as file download
Automatic backups on ViStation
Connection to KNX system via IP/TP line coupler (KNX IP Secure)
No limit on the number of KNX lines; the number of KNX devices is decisive
System status with message counter and report output
System languages: German, English, French and others
Updateable, free firmware updates in the download area
Free software for operation in the download area and in the app stores
Free ViStation desktop software as a demo for up to 5 KNX devices

Including separately enclosed 5VDC/2A power supply for DIN rail mounting (~18mm)

For further information
https://www.beg-luxomat.com/en-au/systems/building-automation/knx/vistation/

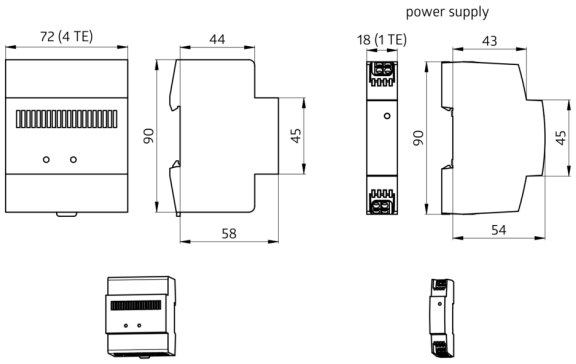
power supply
72 (4 TE)
44
18 (1 TE)
43
90
45
90
45
58
54

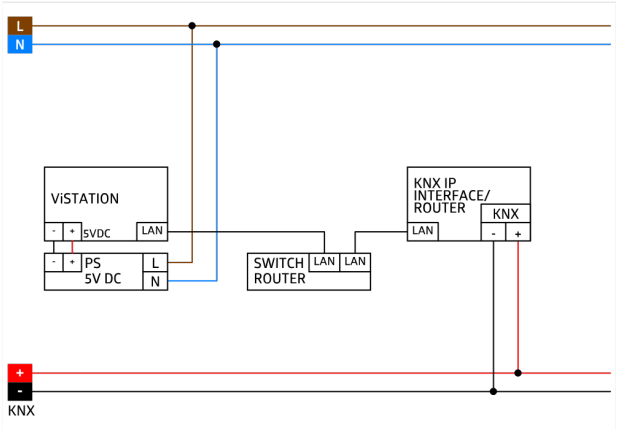
L
N
ViSTATION
- + 5VDC
LAN
- + PS 5V DC
L
N
SWITCH ROUTER
LAN
LAN
KNX IP INTERFACE/ ROUTER
LAN
KNX
- +
+
-
KNX

Accessories



FU-VIS/FBLOCK-CUA
Art.No: 99175

Product type: Licence



FU-VIS/KNX-200
Art.No: 99170

Product type: Licence



FU-VIS/MQTT-CUA
Art.No: 99172

Product type: Licence



FU-VIS/MQTT-200
Art.No: 99171

Product type: Licence



FU-VIS/KNX-CUA
Art.No: 99176

Product type: Licence



FU-VIS/REMOTE-12
Art.No: 99173

Product type: Licence



FU-VIS/FBLOCK-10
Art.No: 99174

Product type: Licence