B.E.G. LUXOMAT® net



# UAD1-230/KNXs REG

90225 EAN: 4007529902255

KNX universal actuator for DIN rail mounting with a semiconductor output for dimming and switching or for PWM control of thermal actuators.

## Order data

| Designation | Colour | Art.No |
|---|---|---|
| UAD1-230/KNXs REG | - | 90225 |

## Technical data

| | |
|---|---|
| Voltage: | via KNX BUS |
| Dimensions: | 55 x 18 x 90 mm (1 TE) |
| Typ. power input: | 3 mA |
| Power consumption: | 0.2 W |
| Degree / class of protection: | IP20 / Class II |
| Ambient temperature: | -5 °C to +45 °C |
| Housing: | Polycarbonate |
| Material color: | - |
| KNX TP 256: | Yes |
| KNX Secure: | Yes |
| Connections and wires: | 1 x KNX bus terminal black/red<br>6 x Screw terminals<br>0.34 ... 2.5 mm² rigid<br>0.34 ... 2.5 mm² fine-wired |
| Switching power: | 0 - 200 W Resistive loads<br>0 - 24 W / 4 LED (Phase control)<br>0 - 100 W / 10 LED (Phase section)<br>For details please see User manual |
| Outputs: | 1 x Semiconductor output |

## Product information

Universal dimming actuator and switching actuator (1-channel)

Valve actuator with pulse width modulation (PWM) for thermal actuators

KNX Secure ready

KNX rail-mounting device for mounting on a DIN rail (TH 35 according to EN 60715) for installation in the distribution board

Binary inputs 230V (2x)

Silent semiconductor output 230V

Extensive dimming functions

Dimming with leading edge or trailing edge phase control

Scene and sequence function

Staircase, timer and counter functions

Locking functions

Various monitoring functions

16 logic functions and time functions

Local operation / hand operation

Power supply via KNX bus

Connection of inputs and outputs via screw terminals

Parameterisation from ETS 5 for integration into KNX systems

The product database can be downloaded from the B.E.G. homepage or imported directly from the ETS online catalogue

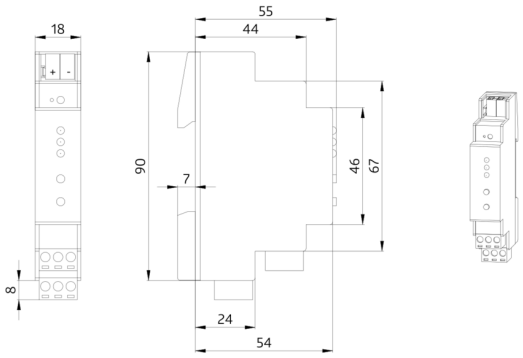
18
55
44
90
7
46
67
8
24
54

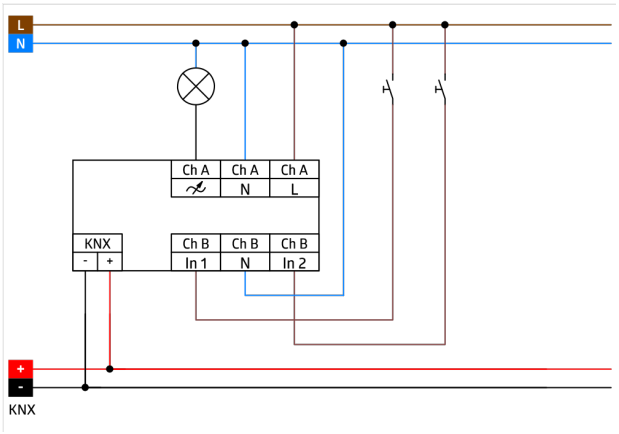
L
N
Ch A
Ch A
Ch A
N
L
KNX
Ch B
Ch B
Ch B
In 1
N
In 2
+
-
KNX