B.E.G. LUXOMAT®



TS-DD

92681 EAN: 4007529926817

230V twilight switch for DIN rail mounting with separate light sensor

Order data

Designation	Colour	Art.No
TS-DD	white	92681

Technical data

Voltage:	230 V AC +/- 10% 50 Hz
Dimensions:	Light sensor: 63 x 38 x 58 mm, DIN-rail mount device 90 x 18 x 45 mm
Typ. power input:	10 mA
Degree / class of protection:	Light sensor IP54 / Class II (Light sensor)
Ambient temperature:	Light sensor -35 °C to +50 °C Electronical unit -10 °C to +40 °C
Housing:	polycarbonate, UV-resistant
Material color:	white glossy, similar to RAL7047
Channel 1 (lighting control)	
Switching power:	**Resistive loads** 1000 W, cos φ = 1 **Fluorescent lamps parallel compensated** 600 W **LV halogen lamps** 450 W
Type of contact (k):	1x NO contact
Switch-on delay:	approx. 8 s
Switch-off delay:	approx. 40 s
Switch-on threshold:	1 – 100 Lux / 50 – 1000 Lux

Product information

Photoelectric switch set for DIN rail

LED adjustment aid (without delay) for adjustment of the switch-on threshold

Electronic component for installation onto DIN rail for convenient adjustment in the control cabinet

Switches off at around 1.3 times the activation value

Separate light sensor for surface or flush installation (included)

Application examples: ideal for entrance areas, staircases, halls where permanent light is required

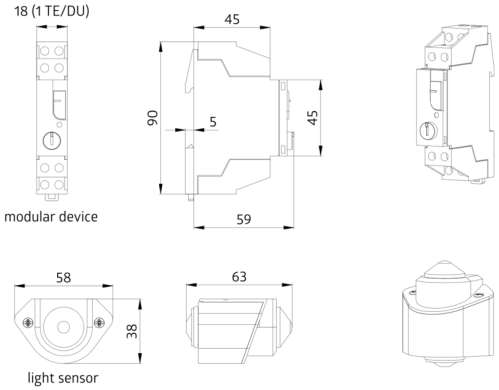
18 (1 TE/DU)
45
90
5
45
59
modular device
58
38
63
light sensor

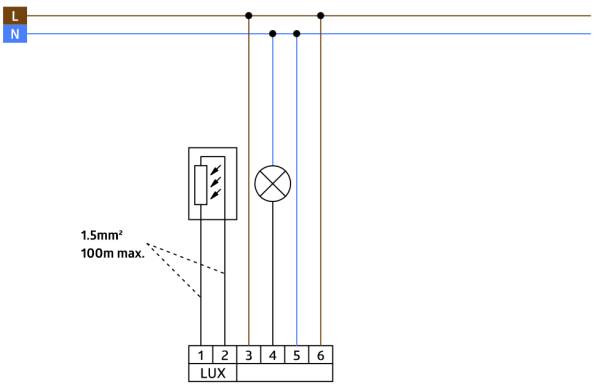
L
N
1.5mm²
100m max.
1
2
3
4
5
6
LUX