B.E.G. LUXOMAT® net



STARTERSET-DALI-LINK-SMALL-OFFICE

93840 EAN: 4007529938407

DALI-LINK Starter Kit for small office applications, featuring a DALI power supply, a slim PD11 multisensor, and a 4-button switch module, including a Bluetooth gateway for app configuration.

Order data

Designation	Colour	Art.No
STARTERSET-DALI-LINK-SMALL-OFFICE		93840

Accessories

Designation	Colour	Art.No
PS-DALI-LINK-FC	white	92846
PD11-DALI-LINK-FLAT-FC	white	93068
PBM-DALI-LINK-4W-BLE	-	92732

Technical data

Voltage:	110 – 277 V AC
Output voltage:	16 V DC (DALI, typical)
Scope of delivery:	PS-DALI-LINK-FC, PBM-DALI-LINK-4W-BLE, PD11-DALI-LINK-FLAT

Product information

DALI-LINK Multi Room Solution - Starter Set

DALI pushbutton module with 4 binary inputs and integrated Bluetooth gateway for hidden mounting behind flush mount switches.

Particularly flat, addressable DALI multi sensor with a visible height of only 0.85 mm and with integrated DALI application controller.

DALI power supply for the B.E.G. DALI-LINK multi room solution for installation in suspended ceilings.

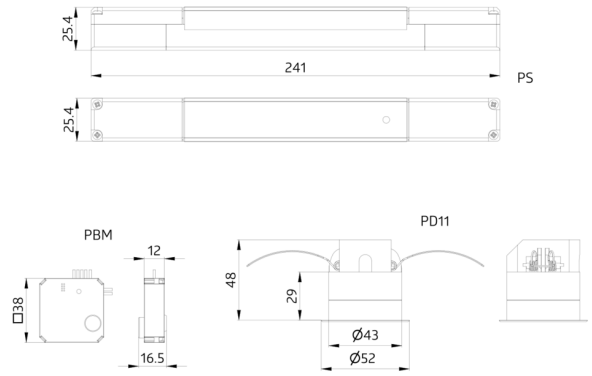
25.4
241
PS
25.4
PBM
12
□38
16.5
PD11
48
29
Ø43
Ø52

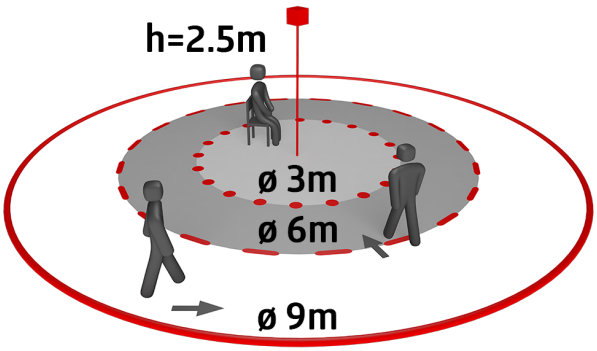
h=2.5m
ø 3m
ø 6m
ø 9m

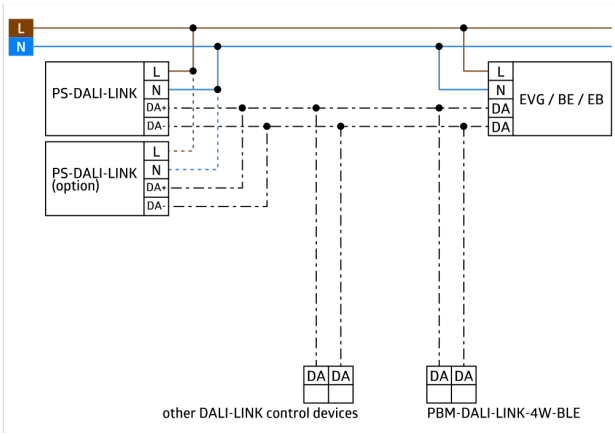
L
N
PS-DALI-LINK
L
N
DA+
DA-
PS-DALI-LINK (option)
L
N
DA+
DA-
L
N
DA
DA
EVG / BE / EB
DA DA
other DALI-LINK control devices
DA DA
PBM-DALI-LINK-4W-BLE

Accessories



PS-DALI-LINK-FC
Art.No: 92846

Voltage: 110 – 277 V AC 50 / 60 Hz
Dimensions: 240 x 26 x 26 mm
Output voltage: 16 V DC (DALI, typical)



PD11-DALI-LINK-FLAT-FC
Art.No: 93068

Voltage: via DALI Bus, max. 22.5 V DC
Dimensions: Ø 52 x 48 mm
Settings: PBM-DALI-LINK-4W-BLE + Smartphone with DALI-LINK App (iOS / Android)



PBM-DALI-LINK-4W-BLE
Art.No: 92732

Voltage: via DALI Bus, max. 22.5 V DC
Dimensions: 38 x 38 x 14 mm
Settings: Smartphone with DALI-LINK App (iOS / Android)