B.E.G. LUXOMAT®

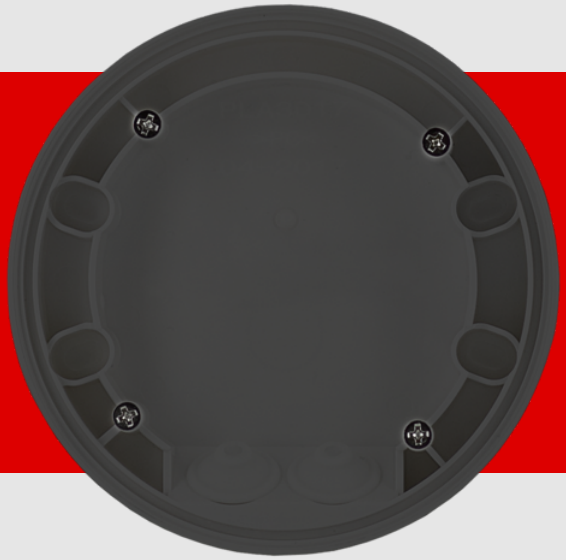

SM socle mounting set IP54 PD2N- / PD4N-FM

93751 EAN: 4007529937516

Surface mounting set IP54 for PD2N and PD4N flush-mount devices

For usability/compatibility of the accessories please refer to the descriptions of the main articles

Order data

Designation	Colour	Art.No
SM socle mounting set IP54 PD2N- / PD4N-FM	anthracite	93751

Technical data

Dimensions:	Ø 109 x 19 mm
Degree / class of protection:	IP54
Housing:	polycarbonate, UV-resistant
Material color:	anthracite mat, similar to RAL7016

Product information

Surface mounting set IP54 for PD2N and PD4N flush-mount devices

For usability/compatibility of the accessories please refer to the descriptions of the main articles

Suitable for: 93340, 93368, 93377, 93511, 93513, 93515, 93517, 93531, 93534, 93544, 93546, ...

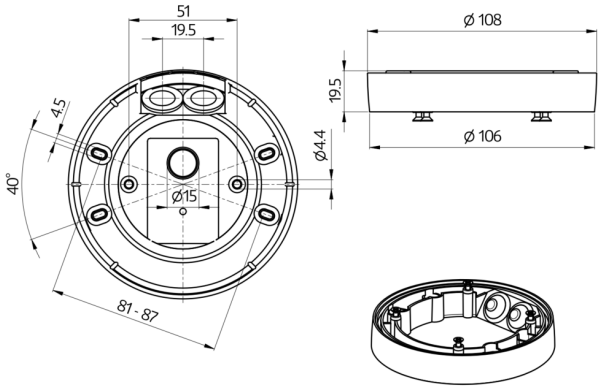
51
19.5
4.5
40°
Ø15
81 - 87
Ø 108
19.5
Ø4.4
Ø 106