B.E.G. LUXOMAT®



SM socle mounting set IP54 PD2N- / PD4N-FM

93307 EAN: 4007529933075

Surface mounting set IP54 for PD2N and PD4N flush-mount devices

For usability/compatibility of the accessories please refer to the descriptions of the main articles

Order data

Designation	Colour	Art.No
SM socle mounting set IP54 PD2N- / PD4N-FM	white	93307

Accessories

Designation	Colour	Art.No
Pendulum mounting set PD2/3/4 SM	jet black	93193
Pendulum mounting set PD2/3/4 SM	white	93179

Technical data

Dimensions:	Ø 109 x 19 mm
Degree / class of protection:	IP54
Material color:	white, similar to RAL9010

Product information

Surface mounting set IP54 for PD2N and PD4N flush-mount devices

For usability/compatibility of the accessories please refer to the descriptions of the main articles

Suitable for: 93340, 93368, 93377, 93511, 93513, 93514, 93515, 93517, 93531, 93534, 93535, 93536, 93544, 93546, ...

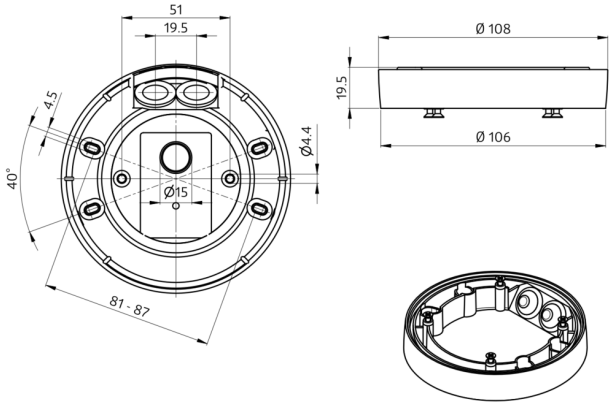
51
19.5
4.5
40°
Ø15
Ø4.4
81 - 87
Ø 108
19.5
Ø 106

Accessories



Pendulum mounting set PD2/3/4 SM
Art.No: 93193

Dimensions: 1 : Ø 113 x 79 mm, 2 : Ø 113 x 34 mm
Housing: polycarbonate, UV-resistant
Material color: jet black, similar to RAL9005



Pendulum mounting set PD2/3/4 SM
Art.No: 93179

Dimensions: 1 : Ø 113 x 79 mm, 2 : Ø 113 x 34 mm
Housing: polycarbonate, UV-resistant
Material color: white, similar to RAL9010