B.E.G. LUXOMAT® net



SBA6-230/KNXs REG

90227 EAN: 4007529902279

KNX switching actuator for DIN rail mounting with six dry contacts for controlling venetian blind, roller shutter, and window drives

Order data

Designation	Colour	Art.No
SBA6-230/KNXs REG	-	90227

Technical data

Voltage:	via KNX BUS
Dimensions:	90 x 108 x 54 mm (6 TE)
Typ. power input:	5 mA
Power consumption:	0.3 W
Degree / class of protection:	IP20 / Class II
Ambient temperature:	-5 °C to +45 °C
Material color:	-
Display elements:	Programming LED 14 x Channel status
Manual operation:	Local on the device : 4 push button / via ETS
KNX TP 256:	Yes
KNX Secure:	Yes
Connections and wires:	KNX bus terminal black/red 1,5 ... 2,5 mm²
Switching power:	8 A; cos φ = 0.4 Inductive load / 230 V AC 50 Hz
Outputs:	6 switching channels up/down

Product information

Switch actuator for roller shutter, blind and window drives

KNX Secure ready

KNX rail-mounting device for mounting on a DIN rail (TH 35 according to EN 60715) for installation in the distribution board

6 up/down control channels

Switching contacts are optimized for inductive loads

Comprehensive emergency stop, scene, and alarm functions, as well as lockout functions

Extensive logic and comparison functions

Calculation Functions

Delay and impulse functions

Switch-on and switch-off delays

Manual operation on the device or via convenient soft keys in the ETS

Connecting the input and outputs via screw terminals

The product database can be downloaded from the B.E.G. homepage or imported directly from the ETS online catalogue

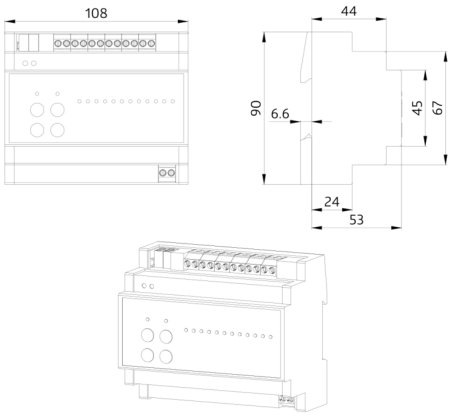
108
44
90
6.6
45
67
24
53

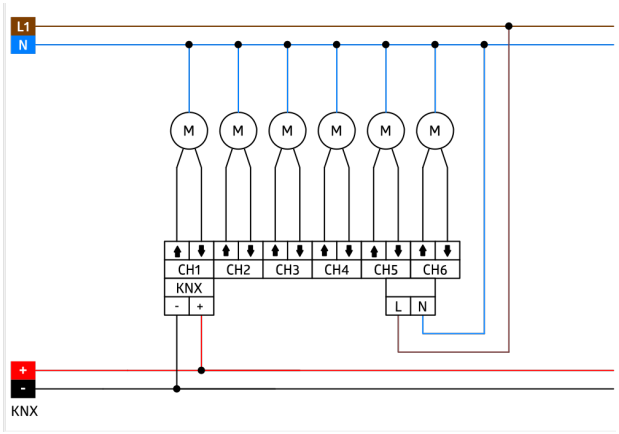
L1
N
M
M
M
M
M
M
CH1
CH2
CH3
CH4
CH5
CH6
KNX
-
+
L
N
+
-
KNX