B.E.G. LUXOMAT® net



SBA4-230 / 10 / H / KNX REG

93930 EAN: 4007529939305

The device is planned for permanent installation on a DIN-rail (top-hat) in high voltage current distributors

Installation must take place in dry interiors

Order data

Designation	Colour	Art.No
SBA4-230 / 10 / H / KNX REG	-	93930

Technical data

Voltage:	230 V AC 50 Hz
Dimensions:	86 x 72 x 60 mm (4 TE)
Output voltage:	230 V AC 50 Hz
Degree / class of protection:	IP20 / Class II
Ambient temperature:	0 °C to +45 °C
Housing:	Plastic LEXAN UL-94-V0
Material color:	-
Display elements:	Red LED: Programming LED Green LED: Channel status
Manual operation:	Manual operation of the shutter channels directly on the device
KNX TP 256:	Yes
Connections and wires:	KNX bus terminal black/red
Switching power:	Roller shutter motors

Product information

The blind actuators KNX SBA receive KNX telegrams and control several blind motors with limit switches independently of one another

Each channel is controlled with two monostable relays and can also be manually activated with the buttons at the actuator

Each channel can be individually programmed through the ETS. Status reports, blocking functions, central switch functions and extensive calibration and positioning functions are available for selection

In the event of bus voltage failure or resumption, the switch positions of the relay can be individually programmed for each channel

The device is planned for permanent installation on a DIN-rail (top-hat) in high voltage current distributors

Installation must take place in dry interiors

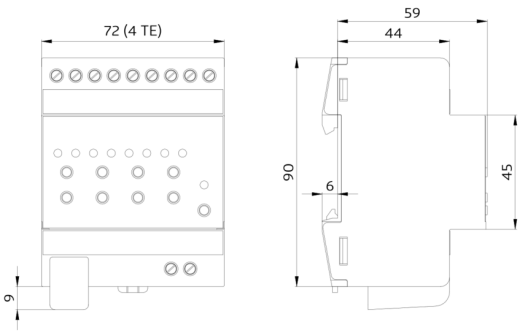
72 (4 TE)
59
44
90
6
45
9

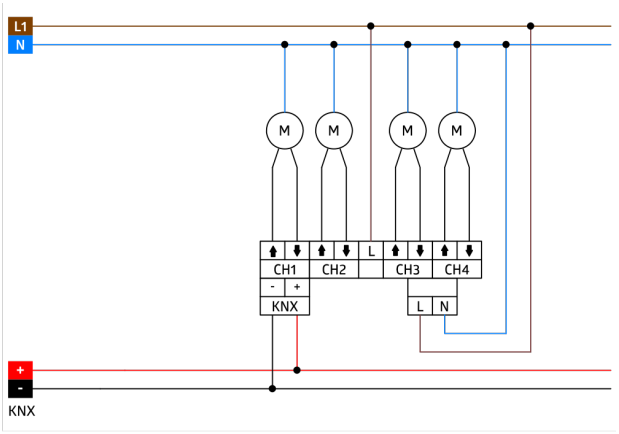
L1
N
M
M
M
M
CH1
CH2
L
CH3
CH4
-
+
KNX
L
N
+
-
KNX