B.E.G. SAFETYLUX®



SAFETYLUX portable LED

93120 EAN: 4007529931200

Portable LED emergency light with high beam (up to approx. 150 m), ambient light, and flashing warning light, 900 lm, rechargeable battery, and wall mount; up to 24 hours of flashing operation.

Order data

Designation	Colour	Art.No
SAFETYLUX portable LED	grey	93120

Technical data

Dimensions:	166 x 125 x 252 mm
Luminous flux / intensity:	LED circuit board securely mounted Colour temperature: 6500 K daylight white Luminous flux of light 900 lm
Luminous power:	long-range LED floodlight: 10 W LED for illuminating the surroundings: 2.5 W
Degree / class of protection:	IP40 / Class II
Ambient temperature:	0 °C to +30 °C
Housing:	Polycarbonate
Material color:	grey, similar to RAL7035
Scope of delivery:	LED emergency light, Wall holder, Charging cable, orange floodlight cover
Accu:	NiMH 4.8 V 8500 mAh
Nominal operation duration:	Main light: 3 h Secondary light: 12 h Blink light: 24 h
Range:	approx. 150 m (> 1 Lux)

Product information

Extremely powerful portable LED emergency light with three operating modes: main beam, blinking warning light, and orientation light

Central LED beam with reflector

Broad illumination of the surroundings thanks to peripherally arranged LEDs

Warning light with blink light mode and coloured cover

Sturdy housing with integrated charger, eco-friendly NiMH battery and mains cable

Luminaire head rotatable vertically by 120°

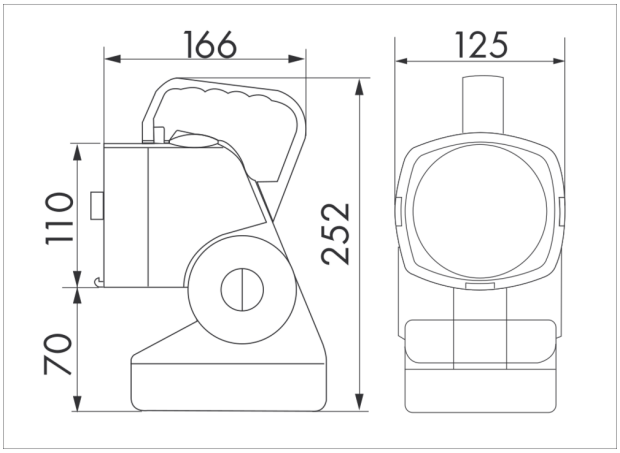
166
125
110
252
70