B.E.G. LUXOMAT® net



SA4 - 230 / 16 / H / KNXs REG

93224 EAN: 4007529932245

Industrial-grade 4-channel KNX switching actuator for DIN rail mounting, featuring four dry-contact 16A outputs and a high inrush current rating of up to 600A.

Order data

Designation	Colour	Art.No
SA4 - 230 / 16 / H / KNXs REG	-	93224

Technical data

Voltage:	via KNX BUS
Dimensions:	90 x 72 x 64 mm (4 TE)
Typ. power input:	5 mA typical 20 mA max.
Power consumption:	0.15 W
Degree / class of protection:	IP20 / Class II
Ambient temperature:	-5 °C to +45 °C
Material color:	-
KNX TP 256:	Yes
KNX Secure:	Yes
Connections and wires:	KNX bus terminal black/red 0.2 ... 4.0 mm² rigid 0.25 ... 2.5 mm² fine-wired (with or without ferrule)
per channel	
Switching power:	3680 W, cos φ = 1 max. inrush current Ip (150 µs) = 600 A
Type of contact (k):	µ-contacts, dry NO contact
Outputs:	4 switching outputs

Product information

Switching actuator for switching loads

KNX Secure ready

Industrial quality

KNX rail-mounting device for mounting on a DIN rail (TH 35 according to EN 60715) for installation in the distribution board

4 independent, potential-free normally open contacts

The switching contacts are optimised for capacitive loads

operating hours counter

cycle counter

8 scene functions per channel

Extensive logic functions

Locking functions

safety features

Staircase and flashing function

Switch-on and switch-off delays

Manual switches for switching without bus tension

Powered via KNX bus

Connection of the outputs via screw terminals

The product database can be downloaded from the B.E.G. homepage or imported directly from the ETS online catalogue

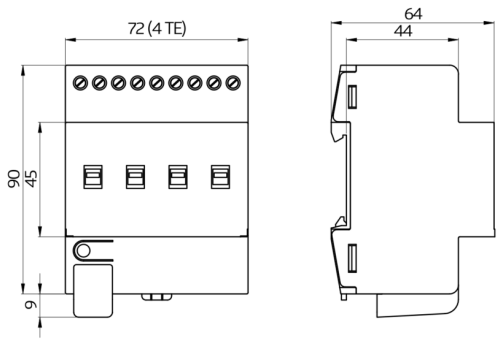
72 (4 TE)
64
44
90
45
9

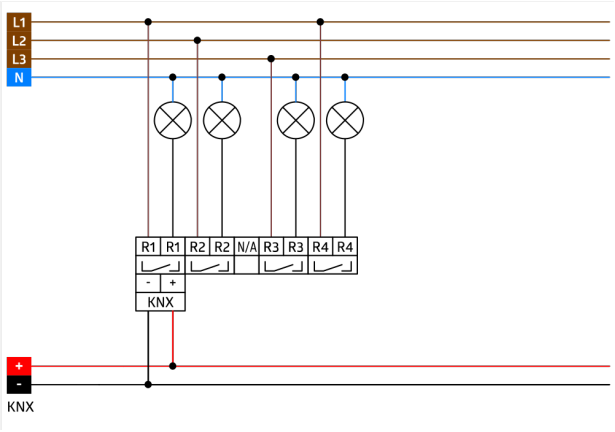
L1
L2
L3
N
R1
R1
R2
R2
N/A
R3
R3
R4
R4
-
+
KNX
+
-
KNX