B.E.G. LUXOMAT® net

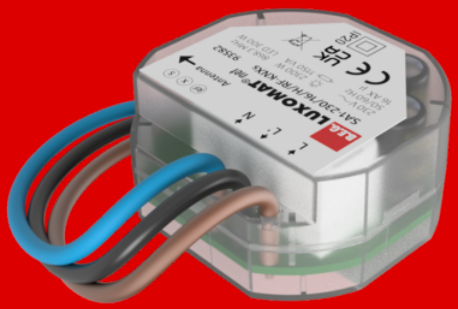

SA1-230 / 16 / H / RF-KNXs

93582 EAN: 4007529935826

KNX RF switching actuator with a 16A switching output for in-wall installation, wireless communication via KNX RF, and an integrated high-performance antenna.

Order data

Designation	Colour	Art.No
SA1-230 / 16 / H / RF-KNXs	-	93582

Technical data

Voltage:	230 V AC ±10% 50 / 60 Hz
Dimensions:	Ø 53 x 24 mm
Power consumption:	1.5 W
Degree / class of protection:	IP20 / Class II
Ambient temperature:	-5 °C to +45 °C
Material color:	-
KNX RF 256:	Yes
KNX Secure:	Yes
Cable length:	150 mm
Connections and wires:	3 x 1.5 mm² Cu
Switching power:	2300 W, cos φ = 1 1150 VA, cos φ = 0.5 300 W LED
Type of contact (k):	µ-contacts, NO contact
Outputs:	1
Frequency:	868.3 MHz (EU), RF1.R, 10 dBm
Transmit range:	max. 150 m

Product information

KNX RF switching actuator 230V

Communication via KNX RF radio

Internal high-performance antenna, no kinking during installation

KNX Secure ready

Compact 1-channel switching actuator for mounting in flush-mounted boxes

Switching contact optimised for capacitive loads

Button for operation check (on the housing)

Connection via prefabricated connection wires

Comprehensive functionality

Integrated repeater function for extending the wireless range

Perfectly suited for renovations and modernisations

Due to the radio frequency of 868 MHz, the device is only authorised for operation in Europe

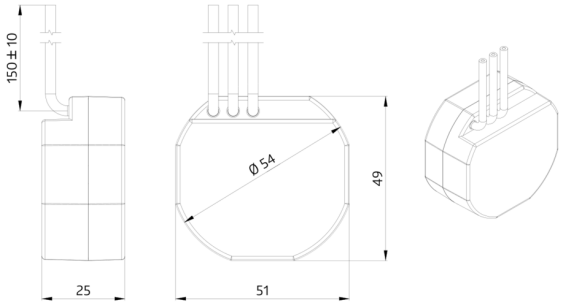
150 ± 10
Ø 54
49
25
51

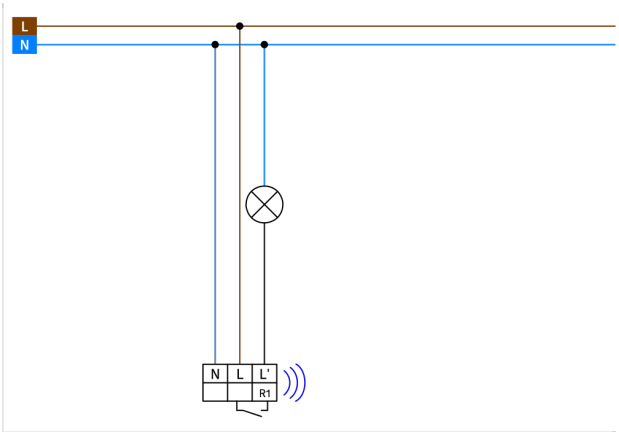
L
N
N
L
L'
R1