B.E.G. LUXOMAT® net

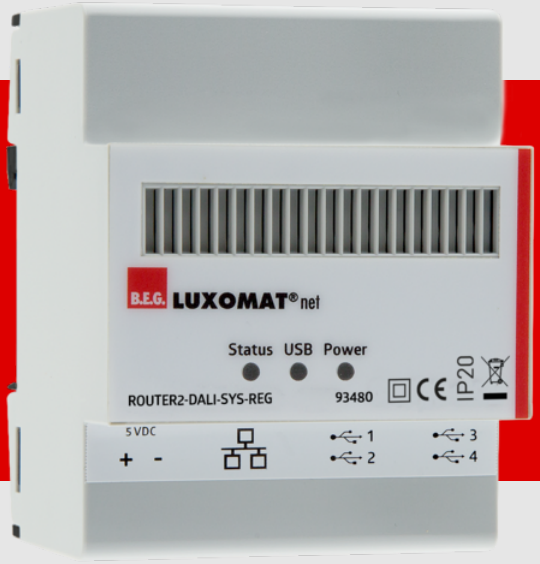

ROUTER2-DALI-SYS-REG

93480 EAN: 4007529934805

DALI-SYS router with an integrated web server, four USB ports for four PS-DALI-SYS-USB-REG devices, and LAN networking for up to 400 DALI lines.

Order data

Designation	Colour	Art.No
ROUTER2-DALI-SYS-REG	white	93480

Technical data

Voltage:	5 V DC
Dimensions:	90 x 72 x 64 mm (4 TE)
Settings:	Via integrated web server and compatible web browser
Power consumption:	max. 5 W
Degree / class of protection:	IP20 / Class II
Ambient temperature:	0 °C to +45 °C
Housing:	Polyamide, UV-resistant
Material color:	white
Connections and wires:	4 x USB, 1 x LAN

Product information

Router with integrated web server and application controller for DIN rail mounting according to DIN EN 60715.

4 USB ports for controlling up to 4 separately available B.E.G. application controllers with integrated DALI power supply unit

1 LAN port for networking up to 100 devices, up to 400 interconnected DALI lines possible

Central management of parameters, addresses, groups and scenes for all networked DALI components

Decentralized application logic in multisensors and buttons - Router only takes over higher-level functions

User and rights management for different roles

DALI emergency light manager

Expanded guided light function GUIDED LIGHT PLUS (across all DALI lines)

Event routing function for implementing DALI cross-line lighting zones

Update Manager, for updating the router firmware via LAN/WAN

Can be operated via compatible web browser on any user device (smartphone, tablet, PC)

Analysis and diagnosis tools for fault-finding

Temperature monitoring of main processor and housing

High-quality fan with automatic speed control

Integrated real-time clock

LED status display

Including separately enclosed 5VDC/2A power supply for DIN rail mounting (~18mm)

Including 4 USB connection cables (0.5m) and 1 LAN cable (0.5m)

Planning support from B.E.G. free of charge

Fee-based commissioning support from B.E.G.

Remote maintenance option via an existing VPN connection or one provided by B.E.G.

Minor maintenance work (e.g. replacing luminaires) can be carried out independently by a building technician or local electrical installer

This article is a component of a lighting control system from B.E.G., which supports the use of DALI control gear (luminaires, relays) from other manufacturers

The use of DALI application controllers from other manufacturers is not supported

The use of DALI input devices (sensors, push-buttons) from other manufacturers is not supported

Additional system components (hardware) from B.E.G. are required

Additional services (planning, commissioning and maintenance) from B.E.G. are required

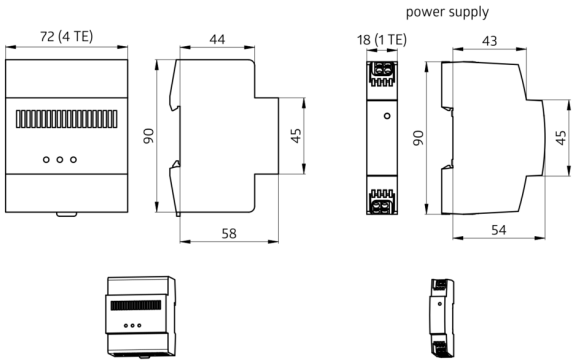
power supply
72 (4 TE)
44
18 (1 TE)
43
90
45
58
90
45
54

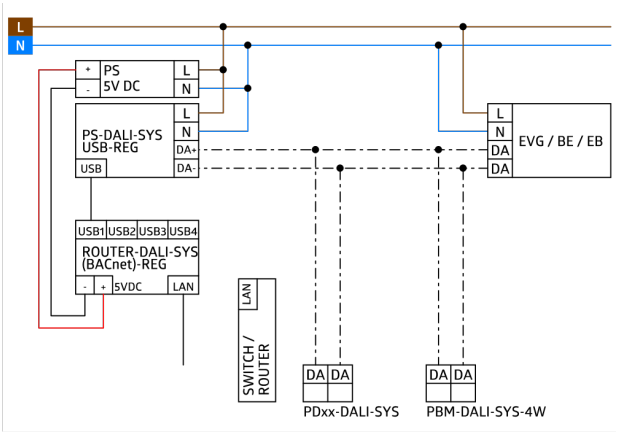
L
N
PS
5V DC
L
N
PS-DALI-SYS
USB-REG
USB
L
N
DA+
DA-
L
N
DA
DA
EVG / BE / EB
USB1
USB2
USB3
USB4
ROUTER-DALI-SYS
(BACnet)-REG
5VDC
LAN
LAN
SWITCH /
ROUTER
DA
DA
PDxx-DALI-SYS
DA
DA
PBM-DALI-SYS-4W