B.E.G. LUXOMAT® net



RM1-SYS-REG DALI-2

93082 EAN: 4007529930821

DALI-2 relay module for DIN rail mounting with one dry contact switching channel up to 3000W for integrating non-dimmable loads into DALI-SYS.

Order data

Designation	Colour	Art.No
RM1-SYS-REG DALI-2	white	93082

Technical data

Voltage:	via DALI Bus, max. 22 V DC
Dimensions:	85 x 18 x 63 mm (1 TE)
Settings:	via B.E.G. BLE App, B.E.G. PC Tools, B.E.G. DALI Router
Typ. power input:	5 mA
Degree / class of protection:	IP20 / Class II
Ambient temperature:	-25 °C to +50 °C
Housing:	polycarbonate, UV-resistant
Material color:	white
Relay	
Switching power:	3000 W, cos φ = 1 1500 VA, cos φ = 0.5
Type of contact (k):	µ-contact, NO contact
Follow-up time:	1 min – 150 min (Cut-off and HVAC mode only)

Product information

DIN-rail DALI relay module with 1 switching channel

High-output and potential-free contact for loads with high inrush current

Seemless integration in B.E.G. LUXOMAT®net DALI-SYS

Integrated application controller with different operating modes

Operating modes: Standard, Cut-off, HVAC, Impulse, Alarm

Full range of functions can only be activated with other products of the product group B.E.G. LUXOMAT®net DALI-SYS

This article is a component of a lighting control system from B.E.G., which supports the use of DALI control gear (luminaires, relays) from other manufacturers

The use of DALI application controllers from other manufacturers is not supported

The use of DALI input devices (sensors, push-buttons) from other manufacturers is not supported

Additional system components (hardware) from B.E.G. are required

Additional services (planning, commissioning and maintenance) from B.E.G. are required

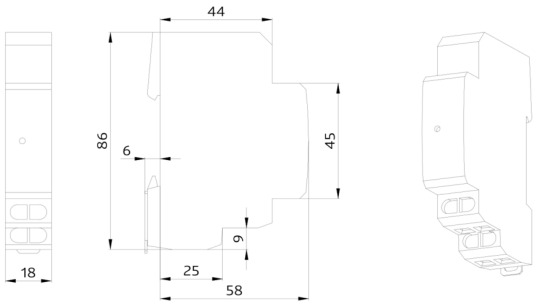
44
86
6
45
9
18
25
58

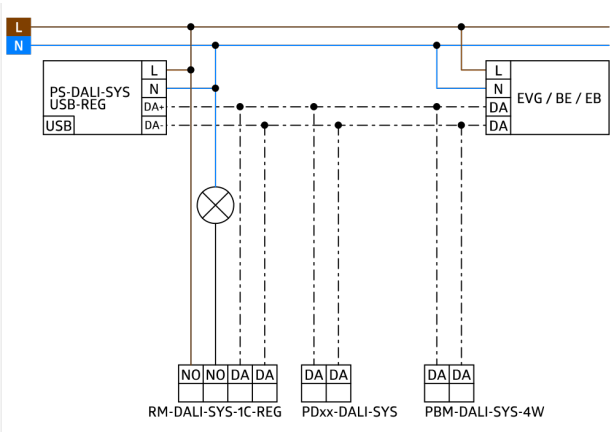
L
N
PS-DALI-SYS
USB-REG
USB
L
N
DA+
DA-
L
N
DA
DA
EVG / BE / EB
NO NO DA DA
RM-DALI-SYS-1C-REG
DA DA
PDxx-DALI-SYS
DA DA
PBM-DALI-SYS-4W