B.E.G. LUXOMAT® net



RM1-LINK-REG DALI-2

93083 EAN: 4007529930838

DALI-2 relay module for DIN rail mounting with one dry contact switching channel rated up to 3000W and an integrated application controller for DALI-LINK.

Order data

Designation	Colour	Art.No
RM1-LINK-REG DALI-2	white	93083

Technical data

Voltage:	via DALI Bus, max. 22.5 V DC
Dimensions:	85 x 18 x 63 mm (1 TE)
Settings:	PBM-DALI-LINK-4W-BLE + Smartphone with DALI-LINK App (iOS / Android)
Typ. power input:	5 mA
Degree / class of protection:	IP20 / Class II
Ambient temperature:	-25 °C to +50 °C
Housing:	polycarbonate, UV-resistant
Material color:	white
Relay	
Switching power:	3000 W, cos φ = 1 1500 VA, cos φ = 0.5
Type of contact (k):	µ-contact, NO contact
Follow-up time:	1 min – 150 min (Cut-off and HVAC mode only)

Product information

DIN-rail DALI relay module with 1 switching channel

High-output and potential-free contact for loads with high inrush current

Integrated application controller with different operating modes

Operating modes: Standard, Cut-off, HVAC, Impulse, Alarm

Full range of functions can only be activated with other products of the product group B.E.G. LUXOMAT®net DALI-LINK

This article is a component of a lighting control system from B.E.G., which supports the use of DALI control gear (luminaires, relays) from other manufacturers

The product can be used across manufacturers in accordance with the given DALI-2 product properties

Additional system components (hardware) are available from B.E.G.

Additional free software is available from B.E.G.

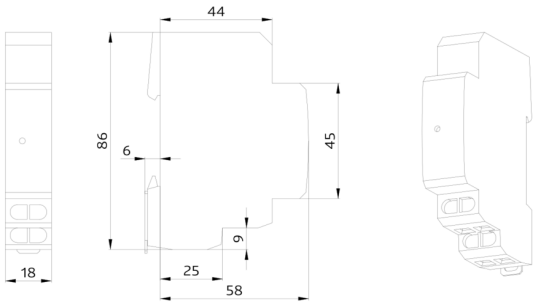
44
86
6
45
9
25
58
18

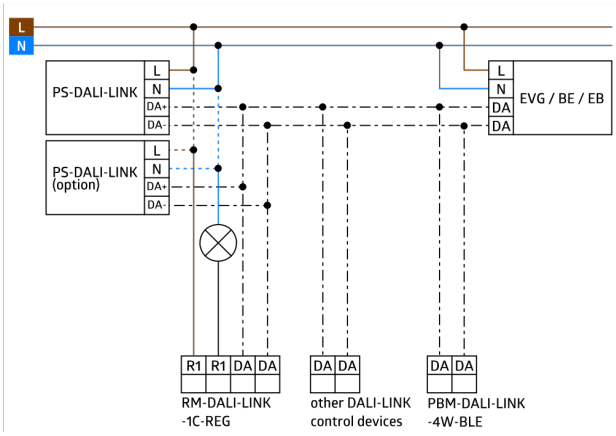
L
N
PS-DALI-LINK
L
N
DA+
DA-
PS-DALI-LINK
(option)
L
N
DA+
DA-
L
N
DA
DA
EVG / BE / EB
R1
R1
DA
DA
RM-DALI-LINK
-1C-REG
DA
DA
other DALI-LINK
control devices
DA
DA
PBM-DALI-LINK
-4W-BLE