B.E.G. LUXOMAT®



Pendulum mounting set PD2/3/4 SM

93193 EAN: 4007529931934

Set for pendant mounting of surface-mounted devices

Suitable for EN32 bar tube (not included in the scope of delivery)

Customised pendulum length according to customer requirements

Order data

Designation	Colour	Art.No
Pendulum mounting set PD2/3/4 SM	jet black	93193

Technical data

Dimensions:	1 : Ø 113 x 79 mm, 2 : Ø 113 x 34 mm
Housing:	polycarbonate, UV-resistant
Material color:	jet black, similar to RAL9005

Product information

Set for pendant mounting of surface-mounted devices

Suitable for EN32 bar tube (not included in the scope of delivery)

Customised pendulum length according to customer requirements

Upper unit also serves as a junction box

Lower unit can be pre-assembled and connected to the upper unit using a quick-fit screw

Also suitable for devices that become surface-mounted devices with accessories

For usability/compatibility of the accessories please refer to the descriptions of the main articles

Suitable for: 92140, 92142, 92144, 92150, 92152, 92153, 92154, 92158, 92190, 92194, 92218, 92219, 92245, 92265, 92270, 92305, 92440, 92442, 92485, 92550, 92580, 92587, 92730, 92740, 92743, 92747, 92751, 92759, 92761, 93091, 93092, 93093, 93233, 93240, 93256, 93307, 93345, 93351, 93452, 93455, 93469, 93473, 93474, 93476, 93477, 93478, 93479, 93485, 93518, 93545, 93546, 93580, 93845, 94402, ...

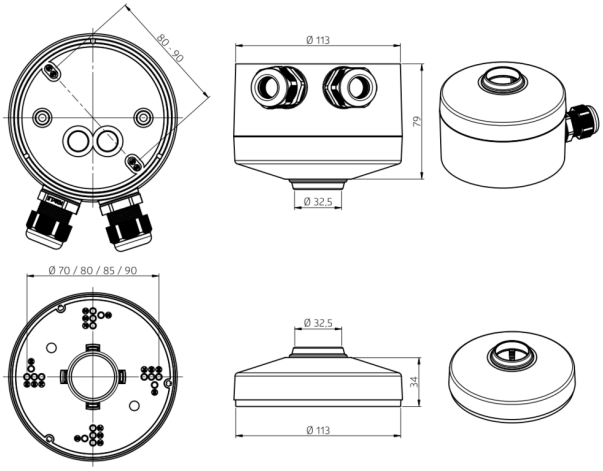
80 - 90
Ø 113
79
Ø 32,5
Ø 70 / 80 / 85 / 90
Ø 32,5
34
Ø 113