B.E.G. LUXOMAT® net




# PS-DALI-SYS-USB-REG

92843 EAN: 4007529928439

DALI-SYS DIN-rail power supply with USB interface and integrated application controller for addressing up to 64 DALI devices.

## Order data

| Designation | Colour | Art.No |
|---|---|---|
| PS-DALI-SYS-USB-REG | white | 92843 |

## Technical data

| | |
|---|---|
| Voltage: | 230 V AC -15/+10% 50 / 60 Hz |
| Dimensions: | 90 x 72 x 64 mm (4 TE) |
| Settings: | Firmware update function button, B.E.G. PC Tools |
| Output voltage: | 16 V DC |
| Power consumption: | 6 W |
| Degree / class of protection: | IP20 / Class II |
| Ambient temperature: | +5 °C to +45 °C |
| Housing: | Polyamide, UV-resistant |
| Material color: | white |
| Connections and wires: | 0.2 ... 4.0 mm² rigid 0.25 ... 2.5 mm² fine-wired (with or without ferrule), USB |
| Nominal current (max.): | 210 mA |

## Product information

DALI power supply with integrated USB interface for DIN-rail mounting

As standalone solution or for seamless integration into B.E.G. LUXOMAT®net DALI-SYS

Integrated application controller for addressing up to 64 DALI components

Update function via integrated keypad and USB interface

Integrated LEDs for visualisation of operating information

Full range of functions can only be activated with other products of the product group B.E.G. LUXOMAT®net DALI-SYS

This article is a component of a lighting control system from B.E.G., which supports the use of DALI control gear (luminaires, relays) from other manufacturers

The use of DALI application controllers from other manufacturers is not supported

The use of DALI input devices (sensors, push-buttons) from other manufacturers is not supported

Additional system components (hardware) from B.E.G. are required

Additional services (planning, commissioning and maintenance) from B.E.G. are required

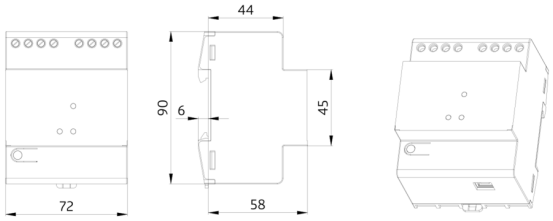
44
90
6
45
72
58

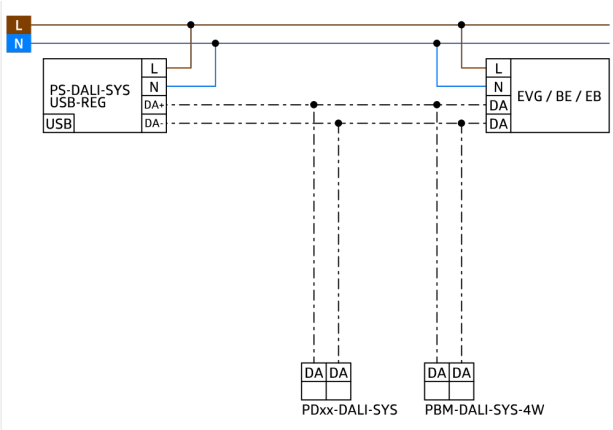
L
N
PS-DALI-SYS
USB-REG
USB
L
N
DA+
DA-
L
N
DA
DA
EVG / BE / EB
DA DA
PDxx-DALI-SYS
DA DA
PBM-DALI-SYS-4W