B.E.G. LUXOMAT® net




# PS-DALI-LINK-USB-REG

93189 EAN: 4007529931897

DALI-LINK top-hat rail power supply with 210 mA, e.g., for 45 DALI lights and 10 control units, with a USB port for expansion to DALI-SYS.

## Order data

| Designation | Colour | Art.No |
|---|---|---|
| PS-DALI-LINK-USB-REG | white | 93189 |

## Technical data

| | |
|---|---|
| Voltage: | 230 V AC -15/+10% 50 / 60 Hz |
| Dimensions: | 90 x 72 x 64 mm (4 TE) |
| Settings: | with Firmware update function button, B.E.G. PC Tools |
| Output voltage: | 16 V DC |
| Power consumption: | 6 W |
| Degree / class of protection: | IP20 / Class II |
| Ambient temperature: | +5 °C to +45 °C |
| Housing: | Polyamide, UV-resistant |
| Material color: | white |
| Connections and wires: | USB |
| Nominal current (max.): | 210 mA |

## Product information

DALI power supply with integrated USB interface for DIN-rail mounting

For example, 45 DALI luminaires and 10 DALI-LINK control devices (multi-sensors or push-button interfaces) can be connected to the power supply.

Integrated USB interface allows expansion to networkable B.E.G. LUXOMAT®net DALI-SYS lighting management solution

Integrated LEDs for visualisation of operating information

Commissioning of the B.E.G. LUXOMAT®net DALI-LINK solution takes place via a free app and the PBM-DALI-LINK-4W-BLE push-button module

This article is a component of a lighting control system from B.E.G., which supports the use of DALI control gear (luminaires, relays) from other manufacturers

The use of DALI application controllers from other manufacturers is not supported

The use of DALI input devices (sensors, push-buttons) from other manufacturers is not supported

Additional system components (hardware) from B.E.G. are required

Additional free software from B.E.G. is required

Suitable for: 93845, ...

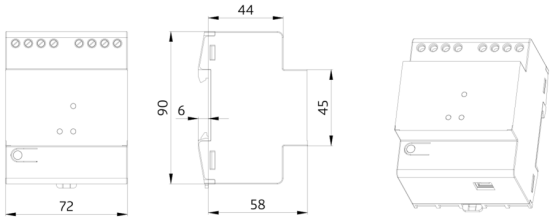
44
90
6
45
72
58

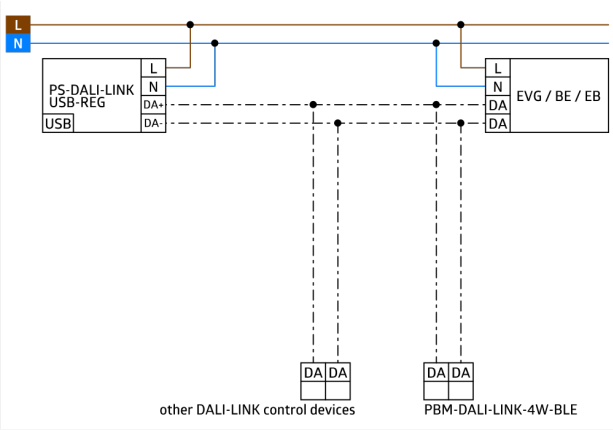
L
N
PS-DALI-LINK
USB-REG
USB
L
N
DA+
DA-
L
N
DA
DA
EVG / BE / EB
DA DA
DA DA
other DALI-LINK control devices
PBM-DALI-LINK-4W-BLE