PS-DALI-LINK-FC



92846 EAN: 4007529928460

DALI-LINK power supply for recessed ceiling installation with a rated current of 100 mA, e.g., for 25 DALI luminaires and 6 DALI-LINK control units.

Order data

Designation	Colour	Art.No
PS-DALI-LINK-FC	white	92846

Technical data

Voltage:	110 – 277 V AC 50 / 60 Hz
Dimensions:	240 x 26 x 26 mm
Output voltage:	16 V DC (DALI, typical)
Power consumption:	3.3 W
Degree / class of protection:	IP20 / Class II
Ambient temperature:	-5 °C to +45 °C
Housing:	Polycarbonate + ABS mixture
Material color:	white
Connections and wires:	0.25 – 2.5 mm² for solid conductors
Nominal current:	100 mA
Nominal current (max.):	120 mA

Product information

DALI power supply for the B.E.G. DALI-LINK multi room solution for installation in suspended ceilings.

Parameterisation of the DALI-LINK solution via Bluetooth with a smartphone and the B.E.G. DALI-LINK App.

For example, 25 DALI luminaires and 6 DALI-LINK control devices (multi-sensors or push-button interfaces) can be connected to the power supply.

It is possible to operate a maximum of one additional DALI-LINK power supply in parallel, doubling the number of DALI devices in the DALI-LINK system (50 DALI luminaires / 12 DALI-LINK control units).

Integrated temperature monitoring and short-circuit detection

Integrated LED for visualisation of operating information

DALI-2 certified product

This article is a component of a lighting control system from B.E.G., which supports the use of DALI control gear (luminaires, relays) from other manufacturers

The product can be used across manufacturers in accordance with the given DALI-2 product properties

Additional system components (hardware) are available from B.E.G.

Additional free software is available from B.E.G.

Suitable for: 93484, 93485, 93840, 93845, ...

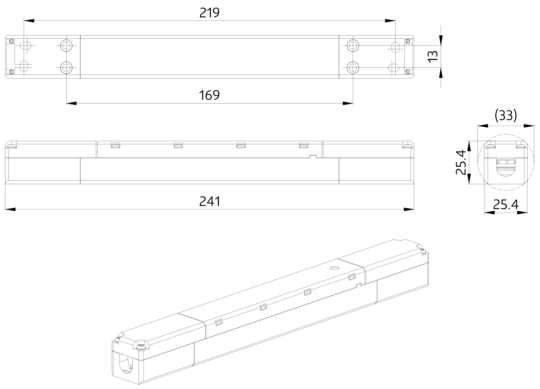
219
13
169
(33)
25.4
241
25.4

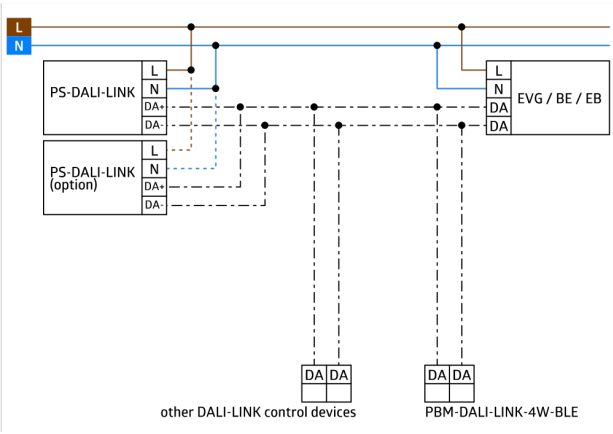
L
N
PS-DALI-LINK
L
N
DA+
DA-
PS-DALI-LINK (option)
L
N
DA+
DA-
L
N
DA
DA
EVG / BE / EB
DA DA
other DALI-LINK control devices
DA DA
PBM-DALI-LINK-4W-BLE