B.E.G. LUXOMAT® net



PICO-DALI-LINK-FC Set 93908-93778

DALI-LINK PIR multisensor with 360° detection and a range of up to Ø10m (78 m²), for integration into DALI-LINK lighting control systems

Order data

Designation	Colour	Art.No
PICO-DALI-LINK-FC	white	93908
Mounting set PICO	black	93778

Technical data

Voltage:	via DALI Bus, max. 22.5 V DC
Dimensions:	**Ø 45 x 50 mm (93778)**
Settings:	PBM-DALI-LINK-4W-BLE + Smartphone with DALI-LINK App (iOS / Android)
Typ. power input:	2 mA
Detection area:	horizontal 360° (Ceiling mounting)
Range:	max. Ø 10 m across max. Ø 6 m towards max. Ø 4 m seated
Monitored area (tangential movement):	78 m² / 2.5 m mounting height
Mounting height min./max./recommended:	2 m / 5 m / 2.5 m
Degree / class of protection:	IP20 / Class II
Impact strength:	IK04
Ambient temperature:	-25 °C to +55 °C
Housing:	polycarbonate, UV-resistant
Material color:	**black, similar to RAL9005 (93778)**
Follow-up time:	1 sec – 120 min
Brightness set value:	10 – 2500 Lux

Product information

Set : PICO-DALI-LINK-FC + Mounting set PICO black, similar to RAL9005

Mini DALI multisensor with only 11mm installation depth for installation in luminiares

Powered via DALI bus

Seemless integration in DALI lighting control system B.E.G. LUXOMAT®net DALI-LINK as modular multimaster option

Detection area can be extended thanks to master-slave-mode

Measuring of mixed light thanks to internal light sensor

Semi-automatic, full-automatic or twilight switch mode

Integrated daylight harvesting circuit (or switch output)

Guided Light, Soft-Start PLUS, Orientation light PLUS

Works out-of-the box for easy installation check

Full range of functions can only be activated with other products of the product group B.E.G. LUXOMAT®net DALI-LINK

Detection area can be restricted with blinds

This article is a component of a lighting control system from B.E.G., which supports the use of DALI control gear (luminaires, relays) from other manufacturers

The use of DALI application controllers from other manufacturers is not supported

The use of DALI input devices (sensors, push-buttons) from other manufacturers is not supported

Additional system components (hardware) from B.E.G. are required

Additional free software from B.E.G. is required

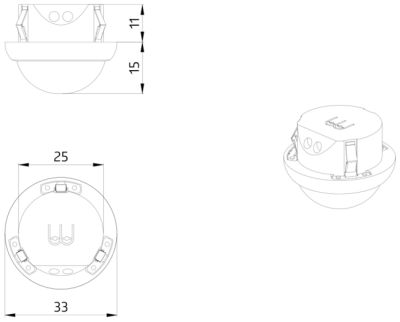
11
15
25
33

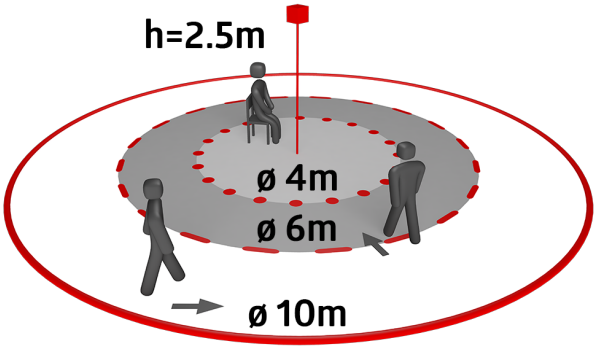
h=2.5m
ø 4m
ø 6m
ø 10m

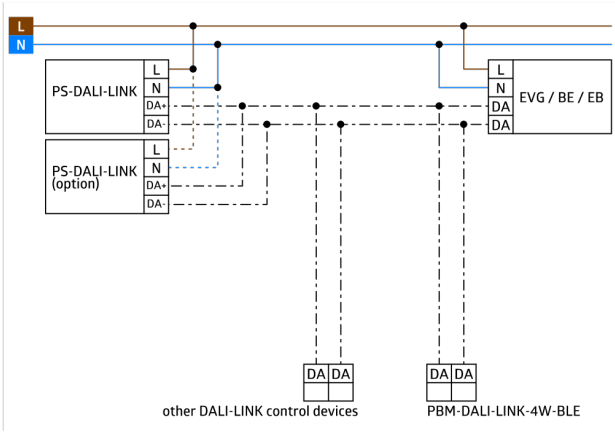
L
N
PS-DALI-LINK
L
N
DA+
DA-
PS-DALI-LINK (option)
L
N
DA+
DA-
L
N
DA
DA
EVG / BE / EB
DA DA
other DALI-LINK control devices
DA DA
PBM-DALI-LINK-4W-BLE

Set items

To receive the bundle according to the technical specification, please order the items listed.



PICO-DALI-LINK-FC
Art.No: 93908

Voltage: via DALI Bus, max. 22.5 V DC
Dimensions: Ø 33 x 27 mm
Settings: PBM-DALI-LINK-4W-BLE + Smartphone with DALI-LINK App (iOS / Android)



Mounting set PICO
Art.No: 93778

Dimensions: Ø 45 x 50 mm
Degree / class of protection: IP20
Housing: polycarbonate, UV-resistant