B.E.G. LUXOMAT® net



PICO-BMS DALI-2 Set 93547-93775

DALI-2 (BMS) PIR multisensor with 360° detection and a range of up to Ø10m (78 m²), DALI-2 input device

Order data

Designation	Colour	Art.No
PICO-BMS DALI-2	white	93547
Mounting set PICO	white	93775

Technical data

Voltage:	via DALI Bus, max. 22.5 V DC
Dimensions:	**Ø 45 x 50 mm (93775)**
Settings:	via DALI-Bus and application which supports DALI multisensors according to IEC62386, parts 101, 103, 303 and 304
Typ. power input:	7 mA
Settling time:	200 ms
Detection area:	horizontal 360° (Ceiling mounting)
Range:	max. Ø 10 m across max. Ø 6 m towards max. Ø 4 m seated
Monitored area (tangential movement):	78 m² / 2.5 m mounting height
Mounting height min./max./recommended:	2 m / 5 m / 2.5 m
Degree / class of protection:	IP20 / Class II
Impact strength:	IK04
Measured light output:	0 - 4095 Lux, Mixed light measuring
Ambient temperature:	-25 °C to +55 °C
Housing:	polycarbonate, UV-resistant
Material color:	**white, similar to RAL9010 (93775)**

Product information

Set : PICO-BMS DALI-2 + Mounting set PICO white, similar to RAL9010

Particularly small DALI-2 multisensor (input device) with only 11mm installation depth for installation in luminiares

DALI-2 certified product

Powered via DALI bus

DALI multimaster technology according to IEC 62386 part 103

Instance 0 provides information regarding occupancy and movement for the DALI-Bus according to IEC 62386 part 303

Instance 1 provides LUX values for the DALI-Bus according to IEC 62386 part 304

Parameterisation is possible via mandatory Multimaster-Application-Controller of any manufacturer. This controller must support IEC 62386 parts 101/103/303/304.

Measuring of mixed light thanks to internal light sensor

Detection area can be restricted with blinds

Individual adaption of the PIR sensor sensitivity

Status LEDs can be activated / deactivated

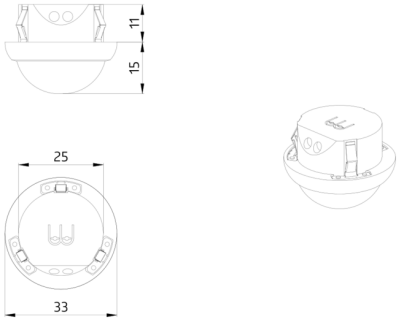
11
15
25
33

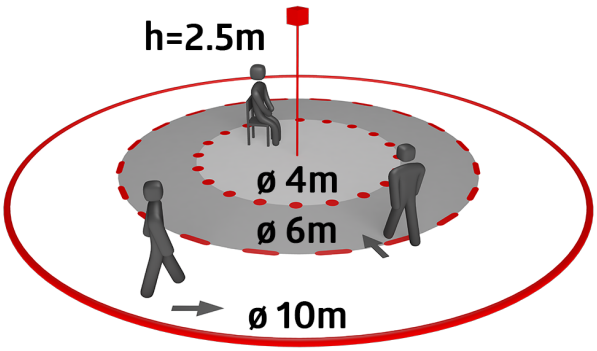
h=2.5m
ø 4m
ø 6m
ø 10m

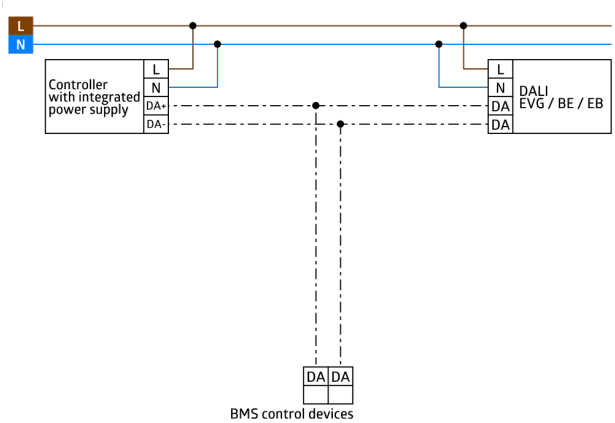
L
N
Controller
with integrated
power supply
L
N
DA+
DA-
L
N
DA
DA
DALI
EVG / BE / EB
DA
DA
BMS control devices

Set items

To receive the bundle according to the technical specification, please order the items listed.



PICO-BMS DALI-2
Art.No: 93547

Voltage: via DALI Bus, max. 22.5 V DC
Dimensions: Ø 33 x 27 mm
Settings: via DALI-Bus and application which supports DALI multisensors according to IEC62386, parts 101, 103, 303 and 304



Mounting set PICO
Art.No: 93775

Dimensions: Ø 45 x 50 mm
Degree / class of protection: IP20
Housing: polycarbonate, UV-resistant