B.E.G. LUXOMAT®

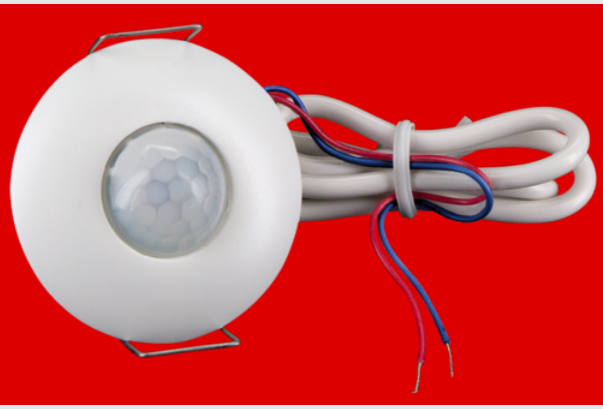

PD9-SH-24V-2W Set
93213-92346

24V PIR motion sensor with 360° detection and a range of up to Ø10m (78 m²), 2-wire operation for specific control systems

Order data

Designation	Colour	Art.No
PD9-SH-24V-2W	white	93213
Cover ring PD9 Ø 45 mm	silver	92346

Technical data

Voltage:	24 V DC
Dimensions:	**Ø 45 x 28 mm + Ø 45 mm (92346)**
Detection area:	horizontal 360° (Ceiling mounting)
Range:	max. Ø 10 m across max. Ø 6 m towards max. Ø 4 m seated
Monitored area (tangential movement):	78 m² / 2.5 m mounting height
Mounting height min./max./recommended:	2 m / 5 m / 2.5 m
Degree / class of protection:	IP20 / Class II
Impact strength:	IK03
Ambient temperature:	-5 °C to +45 °C
Housing:	polycarbonate, UV-resistant
Material color:	**silver mat (92346)**
Cable length:	350 mm
Switching power:	24 V DC / 100mA Pulse

Product information

Set : PD9-SH-24V-2W + Cover ring PD9 Ø 45 mm silver mat

motion detector

For integration into building automation systems

Output 24V DC / 0.5mA

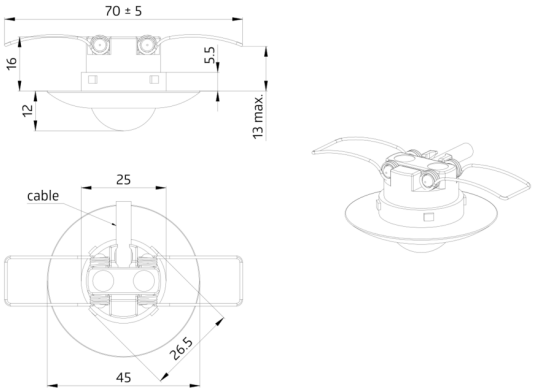
70 ± 5
16
5.5
12
13 max.
25
cable
26.5
45

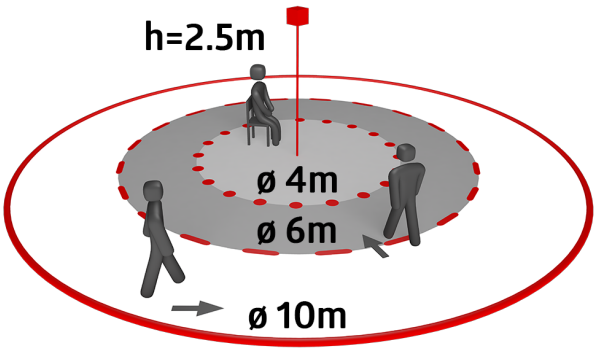
h=2.5m
ø 4m
ø 6m
ø 10m

Set items

To receive the bundle according to the technical specification, please order the items listed.

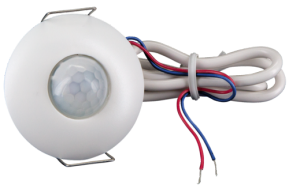

PD9-SH-24V-2W
Art.No: 93213

Voltage: 24 V DC
Dimensions: Ø 45 x 28 mm
Detection area: horizontal 360° (Ceiling mounting)

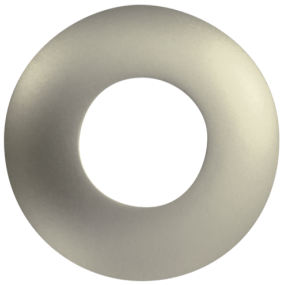

Cover ring PD9 Ø 45 mm
Art.No: 92346

Dimensions: Ø 45 mm
Material color: silver mat