PD9-M-DACO-FC DALI-2

93470 EAN: 4007529934706



DALI-2 PIR motion detector with integrated DALI application controller, 360° detection, and a range of up to Ø10m (78 m²)

Order data

Designation	Colour	Art.No
PD9-M-DACO-FC DALI-2	white	93470

Areas of application

- entrance halls
- corridors/hallways
- small offices

Accessories

Designation	Colour	Art.No
BLE-IR-Adapter	black	93067
IR-Adapter for Smartphones	black	92726
IR-PD-DALI	-	92094
IR-PD-DALI-LD	-	92652
IR-PD-DALI-E	-	92122
IR-PD-DALI-Mini	-	92112
Cover IP65 for Sensor head PD9	transparent	92958
Cover ring PD9 Ø 36 mm	anthracite	92235
Cover ring PD9 Ø 36 mm	white	92238
Cover ring PD9 Ø 36 mm	silver	92237
Cover ring PD9 Ø 45 mm	white	92327
Cover ring PD9 Ø 45 mm	silver	92346
Square design frame PD9-FC	pure white	92993

Technical data

Voltage:	230 V AC ±10% 50 Hz
Dimensions:	Sensor head: Ø 45 x 28 mm, Power supply: 165 x 24 x 24 mm
Power consumption:	approx. 2 W
Slave devices:	up to 8
Detection area:	horizontal 360° (Ceiling mounting)
Range:	max. Ø 10 m across max. Ø 6 m towards max. Ø 4 m seated
Monitored area (tangential movement):	78 m² / 2.5 m mounting height
Mounting height min./max./recommended:	2 m / 5 m / 2.5 m
Degree / class of protection:	IP20 / Class II
Impact strength:	IK03
Ambient temperature:	-25 °C to +50 °C
Housing:	polycarbonate, UV-resistant
Material color:	white mat, similar to RAL9010
Cable length:	50 cm
Channel 1 (lighting control)	
DALI output:	80 mA (guaranteed), 125 mA (max.), shut down mechanism
Supported control gear:	DT0, DT5, DT6, DT7
Supported control devices:	- (single master)
Follow-up time:	1 min – 150 min
Orientation light:	10 – 30 % / OFF / 5 min – 60 min / ∞
Brightness set value:	10 – 2500 Lux
Light measuring:	Mixed light measuring

Product information

Mini occupancy detector with integrated DALI application controller for energy-efficient lighting control

DALI-2 certified product

Integrated DALI power supply

DALI interface for controlling digital, dimmable ECGs in broadcast mode

Manual switching or dimming via conventional pushbuttons

Bidirectional IR communication enables fast integration into the project management function of the B.E.G. One app

Complete range of functions can only be activated using the BLE-IR-Adapter and a compatible Smartphone or Tablet (Android, iOS).

Semi-automatic, full automatic, presence-independent or light-independent mode adjustable

Adjustable regulation dynamics (minimum and maximum values)

Adjustable speed and delay of the regulation

Single master version, not networkable

Detection area can be extended by using slave devices

Measuring of mixed light thanks to internal light sensor

DALI output power can be increased with accessories

Integrated daylight harvesting circuit (or switch output)

Adjustable switch-on value

Last value - Reminder function for switch-on value

Adjustable brightness set value and reflection factor

Indication of the current light sensor value in the B.E.G. One App

Self-check and display of device errors in the B.E.G. One App

Status LEDs can be activated / deactivated

PIN code

Corridor function - Deactivates the possibility to switch off the light via the push-button

Number of DALI participants can be determined quickly and reliably via the B.E.G. Online DALI Line Planner

Software is backwards compatible with the first generation (except DSI, double lock and corridor function)

Factory setting 10 min follow-up time and 500 lux brightness set value

Spring clips for quick and easy installation in suspended ceilings and light fittings

Includes 45 mm cover ring and blinds

Power supply passes through the hole in the ceiling for the detector (34 mm Ø)

Application examples:
entrance halls, corridors/hallways, small offices

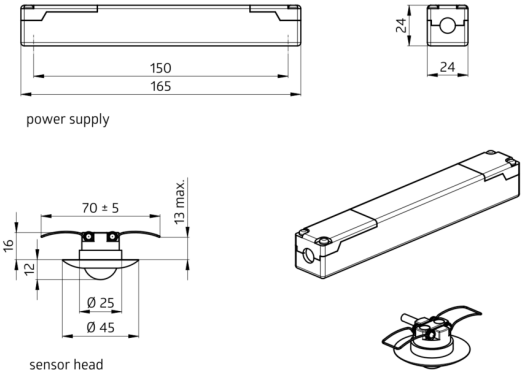
150
165
power supply
24
24
70 ± 5
13 max.
16
12
Ø 25
Ø 45
sensor head

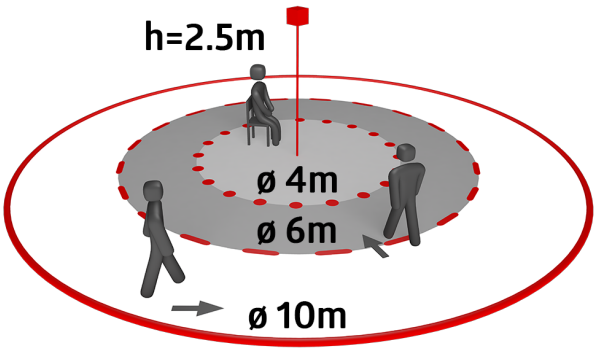
h=2.5m
ø 4m
ø 6m
ø 10m

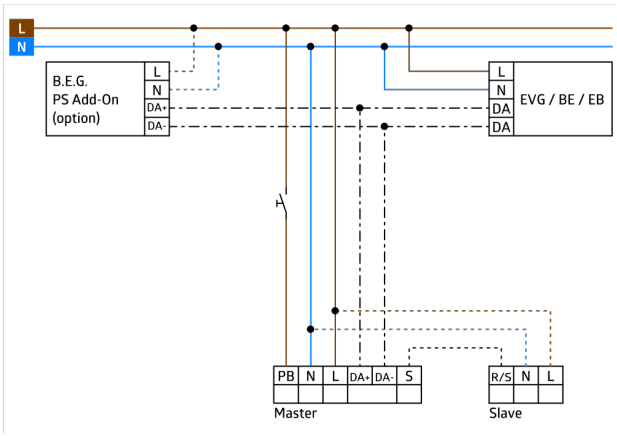
L
N
B.E.G.
PS Add-On
(option)
L
N
DA+
DA-
L
N
DA
DA
EVG / BE / EB
PB
N
L
DA+
DA-
S
Master
R/S
N
L
Slave

Accessories



BLE-IR-Adapter
Art.No: 93067

Dimensions: 40 x 55 x 103 mm
Material color: black
Frequency: 2.4 GHz ISM band, GFSK 0.2 dBm + 5.3 dBi = 5.5 dBm



IR-Adapter for Smartphones
Art.No: 92726

Dimensions: 47 x 19 x 10 mm
Degree / class of protection: IP20
Ambient temperature: -20 °C to +40 °C

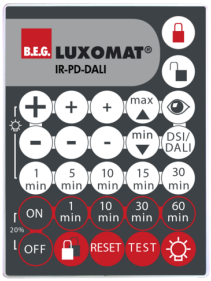

IR-PD-DALI
Art.No: 92094

Battery: 3.0 V Lithium CR2032 (inclusive)
Dimensions: 80 x 60 x 8 mm
Material color: -



IR-PD-DALI-LD
Art.No: 92652

Battery: 3 x 1.5 V Micro AAA (not included)
Dimensions: 83 x 53 x 17 mm
Material color: -



IR-PD-DALI-E
Art.No: 92122

Battery: 3.0 V Lithium CR2032 (inclusive)
Dimensions: 80 x 60 x 8 mm
Material color: -



IR-PD-DALI-Mini
Art.No: 92112

Battery: 3.0 V Lithium CR2032 (inclusive)
Dimensions: 57 x 35 x 7 mm
Material color: -





Cover IP65 for Sensor head PD9
Art.No: 92958

Degree / class of protection: IP65
Housing: UV-resistant
Material color: transparent



Cover ring PD9 Ø 36 mm
Art.No: 92235

Dimensions: Ø 36 mm
Housing: polycarbonate, UV-resistant
Material color: anthracite glossy

Cover ring PD9 Ø 36 mm
Art.No: 92238

Dimensions: Ø 36 mm
Housing: polycarbonate, UV-resistant
Material color: white glossy



Cover ring PD9 Ø 36 mm
Art.No: 92237

Dimensions: Ø 36 mm
Housing: polycarbonate, UV-resistant
Material color: silver glossy



Square design frame PD9-FC
Art.No: 92993

Dimensions: 45 x 45 x 2.6 mm
Housing: polycarbonate, UV-resistant
Material color: pure white mat, similar to RAL9010

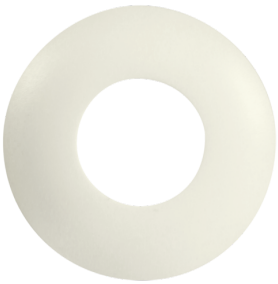

Cover ring PD9 Ø 45 mm
Art.No: 92327

Dimensions: Ø 45 mm
Material color: white mat

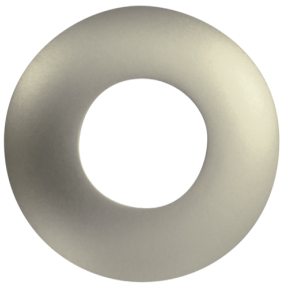

Cover ring PD9 Ø 45 mm
Art.No: 92346

Dimensions: Ø 45 mm
Material color: silver mat