B.E.G. LUXOMAT®



PD9-M-1C-SDB-IP65-GH-FC

92931 EAN: 4007529929313

Mini-occupancy detector designed for high-humidity locations especially for large mounting heights

One potential-free (dry) switching contact

Version as master device

Areas of application

- plumbed rooms/bathrooms
- sports halls/ storage rooms

Order data

Designation	Colour	Art.No
PD9-M-1C-SDB-IP65-GH-FC	white	92931

Accessories

Designation	Colour	Art.No
BLE-IR-Adapter	black	93067
IR-PD9	-	92201
IR-PD-Mini	-	92159
RC-Arc extinction kit	white	10880
Mini-RC-Arc extinction kit		10882

Technical data

Voltage:	230 V AC ±10% 50 Hz
Dimensions:	Sensor head: Ø 36 x 40 mm, Power supply: 154 x 38 x 25 mm
Power consumption:	2.2 W
Detection area:	horizontal 360° (Ceiling mounting)
Range:	max. Ø 3.5 m across
Monitored area (tangential movement):	9 m² / 6 m mounting height
Mounting height min./max./recommended:	5 m / 10 m / 6 m
Degree / class of protection:	IP65 / Class III
Impact strength:	IK03
Ambient temperature:	-25 °C to +50 °C
Housing:	polycarbonate, UV-resistant
Material color:	white mat, similar to RAL9010
Cable length:	350 cm
Channel 1 (lighting control, potential-free (dry))	
Switching power:	2300 W, cos φ = 1 1150 VA, cos φ = 0.5 400 W LED max. inrush current Ip (20 ms) = 80 A
Type of contact (k):	1x µ-contact, dry NO contact
Follow-up time:	15 sec – 30 min, Pulse
Switch-on threshold:	10 – 2000 Lux
Light measuring:	Mixed light measuring

Product information

Mini-occupancy detector designed for high-humidity locations especially for large mounting heights

One potential-free (dry) switching contact

Version as master device

One additional Slave device sensor can be directly connected

Additional functions can be set up using the optional remote control.

Spring clips for quick and easy installation in suspended ceilings and light fittings

Includes 45 mm cover ring and blind

Application examples:
plumbed rooms/bathrooms, sports halls/ storage rooms

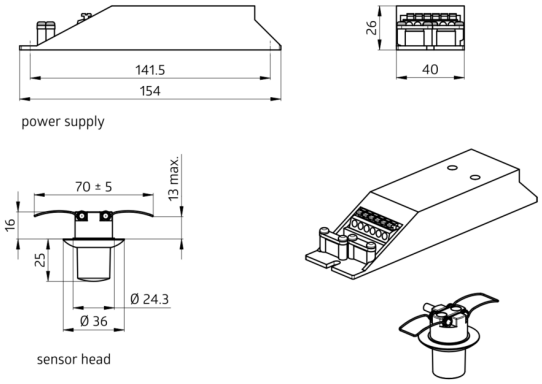
141.5
154
power supply
26
40
70 ± 5
13 max.
16
25
Ø 24.3
Ø 36
sensor head

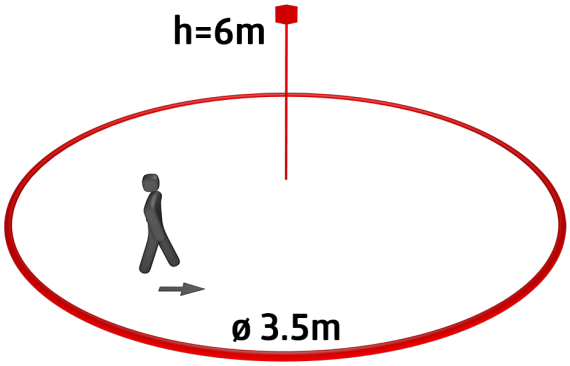
h=6m
ø 3.5m

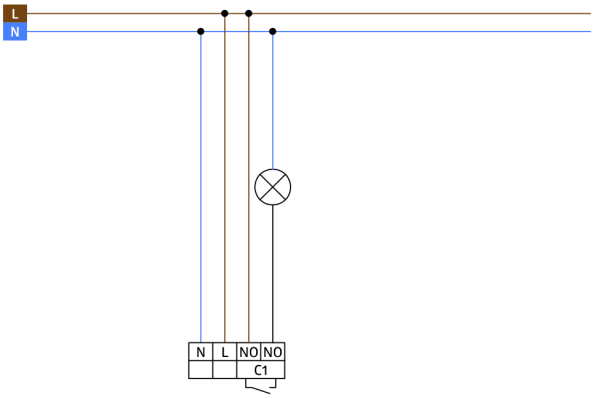
L
N
N
L
NO
NO
C1

Accessories



BLE-IR-Adapter
Art.No: 93067

Dimensions: 40 x 55 x 103 mm
Material color: black
Frequency: 2.4 GHz ISM band, GFSK 0.2 dBm + 5.3 dBi = 5.5 dBm

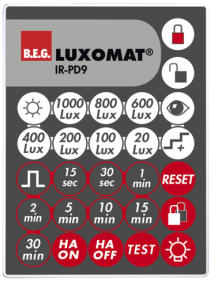

IR-PD9
Art.No: 92201

Battery: 3.0 V Lithium CR2032 (inclusive)
Dimensions: 80 x 60 x 8 mm
Material color: -



IR-PD-Mini
Art.No: 92159

Battery: 3.0 V Lithium CR2032 (inclusive)
Dimensions: 57 x 35 x 7 mm
Material color: -



RC-Arc extinction kit
Art.No: 10880

Voltage: 230 V AC ±10%
Dimensions: 38 x 12 x 26 mm
Degree / class of protection: IP20 / Class II



Mini-RC-Arc extinction kit
Art.No: 10882

Voltage: 230 V AC ±10%
Dimensions: 50 x 23 x 8 mm
Degree / class of protection: IP20 / Class II