B.E.G. LUXOMAT®

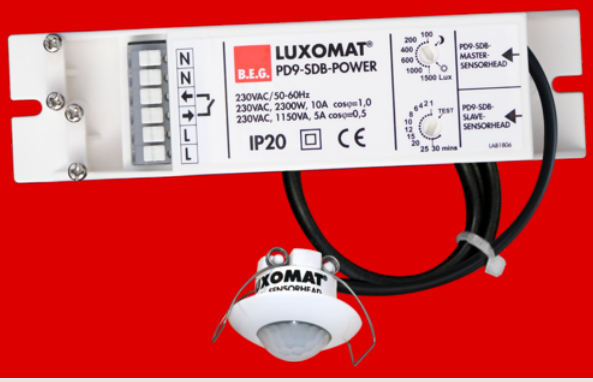

PD9-M-1C-SDB-IP65-FC
Set 92912-92915

230V PIR motion detector with 360° detection and a range of up to Ø10m (78 m²), IP65, remote-controllable, and with a dry contact

Order data

Designation	Colour	Art.No
PD9-M-1C-SDB-IP65-FC	white	92912
PD9-S-SDB-FC	white	92915

Areas of application

- entrance halls
- plumbed rooms/bathrooms

Technical data

Voltage:	230 V AC ±10% 50 Hz
Dimensions:	Sensor head: Ø 36 x 28 mm, Power supply: 154 x 40 x 26 mm
Power consumption:	2.2 W
Detection area:	horizontal 360° (Ceiling mounting)
Range:	max. Ø 10 m across max. Ø 6 m towards max. Ø 4 m seated
Monitored area (tangential movement):	78 m² / 2.5 m mounting height
Mounting height min./max./recommended:	2 m / 5 m / 2.5 m
Degree / class of protection:	IP65 / Class III
Impact strength:	IK03
Ambient temperature:	-25 °C to +50 °C
Housing:	polycarbonate, UV-resistant
Material color:	white mat, similar to RAL9010
Cable length:	350 cm
Channel 1 (lighting control, potential-free (dry))	
Switching power:	2300 W, cos φ = 1 1150 VA, cos φ = 0.5 400 W LED max. inrush current Ip (20 ms) = 80 A
Type of contact (k):	1x µ-contact, dry NO contact
Follow-up time:	15 sec – 30 min, Pulse
Switch-on threshold:	20 – 1500 Lux
Light measuring:	Mixed light measuring

Product information

Set : PD9-M-1C-SDB-IP65-FC + PD9-S-SDB-FC white, similar to RAL9010

Mini-occupancy detector designed for high-humidity locations

One potential-free (dry) switching contact

Version as master device

One additional Slave device sensor can be directly connected

Additional functions can be set up using the optional remote control.

Mounting in closed ceilings is not possible

Spring clips for quick and easy installation in suspended ceilings and light fittings

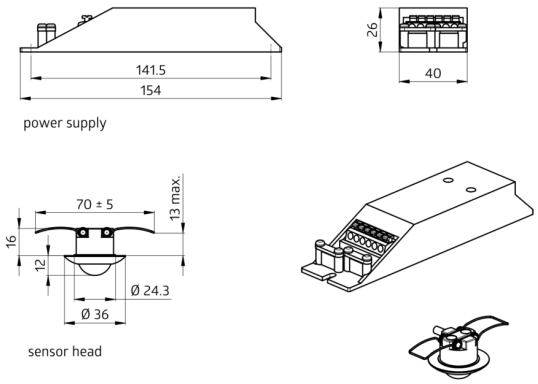
141.5
154
power supply
26
40
70 ± 5
13 max.
16
12
Ø 24.3
Ø 36
sensor head

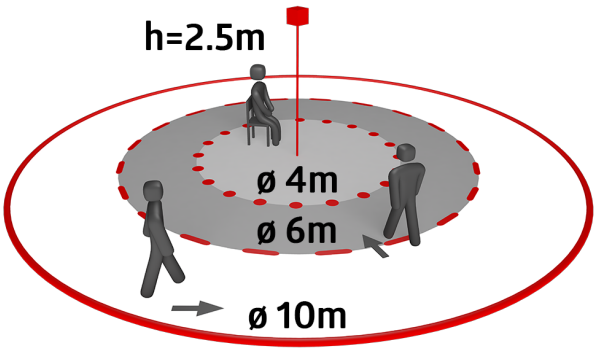
h=2.5m
ø 4m
ø 6m
ø 10m

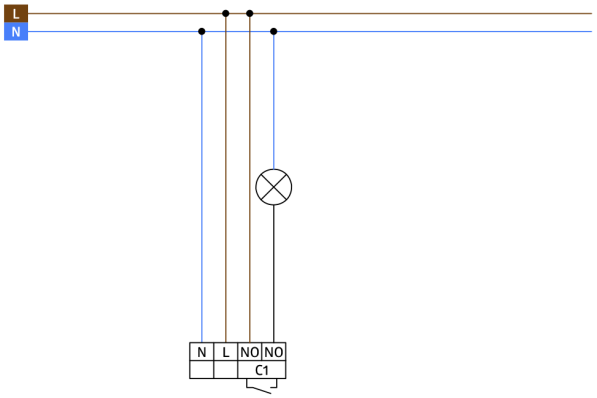
L
N
N
L
NO
NO
C1

Set items

To receive the bundle according to the technical specification, please order the items listed.

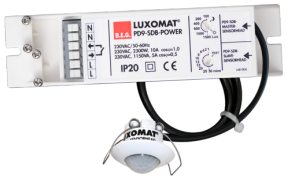

PD9-M-1C-SDB-IP65-FC
Art.No: 92912

Voltage: 230 V AC ±10% 50 Hz
Dimensions: Sensor head: Ø 36 x 28 mm, Power supply: 154 x 40 x 26 mm
Power consumption: 2.2 W



PD9-S-SDB-FC
Art.No: 92915

Dimensions: Ø 36 x 28 mm
Detection area: horizontal 360° (Ceiling mounting)
Range: max. Ø 10 m across
max. Ø 6 m towards
max. Ø 4 m seated