B.E.G. LUXOMAT®



PD9-M-1C-FC Set
92900-92346

230V PIR motion detector with 360° detection and a range of up to Ø10m (78 m²), remote-controlled

Order data

Designation	Colour	Art.No
PD9-M-1C-FC	white	92900
Cover ring PD9 Ø 45 mm	silver	92346

Areas of application

- entrance halls
- small offices
- corridors/hallways

Technical data

Voltage:	110 – 240 V AC 50 / 60 Hz
Dimensions:	**Sensor head: Ø 45 x 28 mm, Power supply: 165 x 24 x 24 mm + Ø 45 mm (92346)**
Power consumption:	approx. 0.5 W
Detection area:	horizontal 360° (Ceiling mounting)
Range:	max. Ø 10 m across max. Ø 6 m towards max. Ø 4 m seated
Monitored area (tangential movement):	78 m² / 2.5 m mounting height
Mounting height min./max./recommended:	2 m / 5 m / 2.5 m
Degree / class of protection:	IP20 / Class II
Impact strength:	IK03
Ambient temperature:	-25 °C to +50 °C
Housing:	polycarbonate, UV-resistant
Material color:	**silver mat (92346)**
Cable length:	45 cm, screened
Channel 1 (lighting control)	
Switching power:	2300 W, cos φ = 1 1150 VA, cos φ = 0.5 800 W LED max. inrush current Ip (20 ms) = 165 A max. inrush current Ip (200 µs) = 800 A
Type of contact (k):	1x µ-contact, NO contact with tungsten pre-make contact
Follow-up time:	5 min – 30 min, Pulse
Switch-on threshold:	20 – 1000 Lux
Light measuring:	Mixed light measuring

Product information

Set : PD9-M-1C-FC + Cover ring PD9 Ø 45 mm silver mat

Mini-occupancy detector

One channel for light switching

Version as master device

Detection area can be extended by using slave devices

Easy operation with remote control (required)

Manual switching via push-button possible

Power supply passes through the hole in the ceiling for the detector (34 mm Ø)

Spring clips for quick and easy installation in suspended ceilings and light fittings

Includes 45 mm cover ring and blinds

Factory settings 10 min and 500 lux

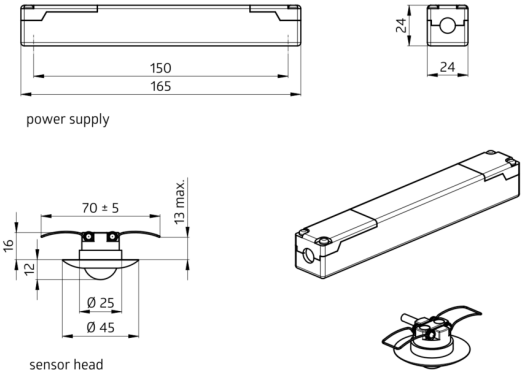
150
165
24
24
power supply
70 ± 5
13 max.
16
12
Ø 25
Ø 45
sensor head

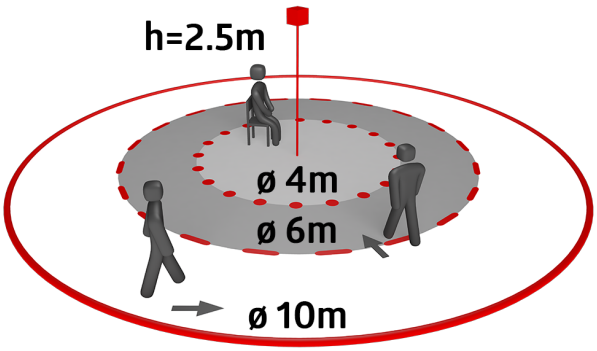
h=2.5m
ø 4m
ø 6m
ø 10m

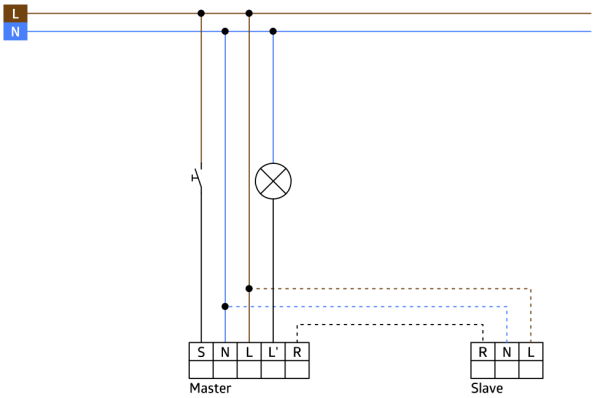
L
N
S
N
L
L'
R
Master
R
N
L
Slave

Set items

To receive the bundle according to the technical specification, please order the items listed.



PD9-M-1C-FC
Art.No: 92900

Voltage: 110 – 240 V AC 50 / 60 Hz
Dimensions: Sensor head: Ø 45 x 28 mm, Power supply: 165 x 24 x 24 mm
Power consumption: approx. 0.5 W

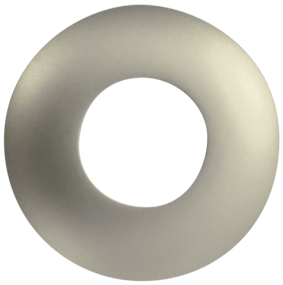

Cover ring PD9 Ø 45 mm
Art.No: 92346

Dimensions: Ø 45 mm
Material color: silver mat