B.E.G. LUXOMAT® net



PD9-KNXs-DX-FC Set 93520-92346

KNX PIR Motion Sensor (Deluxe) with 360° detection and a range of up to Ø10m (78 m²)

Order data

Designation	Colour	Art.No
PD9-KNXs-DX-FC	white	93520
Cover ring PD9 Ø 45 mm	silver	92346

Technical data

Voltage:	via KNX BUS
Dimensions:	**Sensor head: Ø 45 x 28 mm, Power supply: 129 x 29 x 22 mm + Ø 45 mm (92346)**
Typ. power input:	12 mA
Detection area:	horizontal 360° (Ceiling mounting)
Range:	max. Ø 10 m across max. Ø 6 m towards max. Ø 4 m seated
Monitored area (tangential movement):	78 m² / 2.5 m mounting height
Mounting height min./max./recommended:	2 m / 5 m / 2.5 m
Degree / class of protection:	IP20 / Class III
Impact strength:	IK03
Ambient temperature:	-25 °C to +55 °C
Temperature measurement range:	-5 °C to +45 °C
Housing:	polycarbonate, UV-resistant
Material color:	**silver mat (92346)**
Number of light sensors:	1
Number of PIR sensors:	1
KNX TP 256:	Yes
KNX Secure:	Yes
Cable length:	45 cm
Orientation light:	5 – 100 % / OFF / 1 min – 255 min
Night light:	5 – 100 %
Brightness set value:	5 – 2000 Lux

Product information

Set : PD9-KNXs-DX-FC + Cover ring PD9 Ø 45 mm silver mat

KNX mini occupancy detector with integrated bus connector

KNX Secure ready

HCL/RGB control

Parameterisation from ETS 5 for integration into KNX systems

Individual adaption of the PIR sensor sensitivity

Mixed light measurement using internal and remote (optional) light sensors

Intelligent semi-automatic mode, occupancy-independent regulating mode (photoelectric switch), full automatic mode

1 x Light (for regulating or switching), 1 x slave output, 3 separate HVAC-blocs

Regulation of up to three lighting groups using offset (external influence possible)

Short presence, self-adjusting follow-up time, corridor function

Various locking functions

Soft-start

Two logic modules

Recall of light scenes

Deactivatable status indicators

The product database for import into the ETS database can be downloaded from the B.E.G. homepage.

Detection area can be extended thanks to master-slave-mode

Extensive optimization options for light measurement

Measured light value is communicated to the bus

Adaption of dimming curve

Bidirectionally remote control-capable with the IR adapter and the B.E.G. smartphone app

PIN code

IR remote control-capable via IR remote control (optionally)

5 button remote control, programmable at choice (accessory)

Programming button (phys. address) can be operated via remote control

HVAC mode (0=automatic, 1=comfort, 2=stand-by, 3=economy, 4=antifreeze/heat protection)

Manual influence via external KNX push buttons possible

Function control (heartbeat, cyclical sending)

Occupancy simulation

Forced switch-off

Intelligent central-off function

Premonition of switch-off

Burn-in function for fluorescent lamps selectable from 1h till 100h

Behaviour upon bus voltage return definable at choice

Variable safety pause after switching off the lights

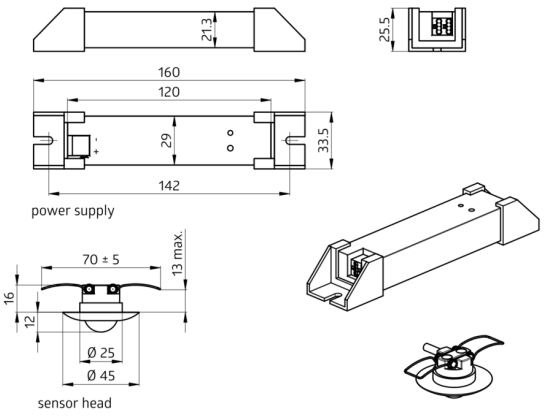
21.3
25.5
160
120
29
33.5
142
power supply
70 ± 5
13 max.
16
12
Ø 25
Ø 45
sensor head

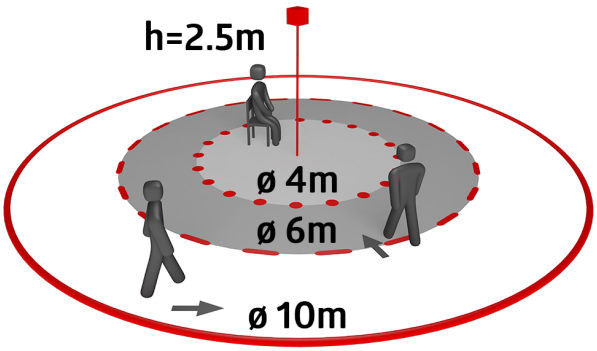
h=2.5m
ø 4m
ø 6m
ø 10m

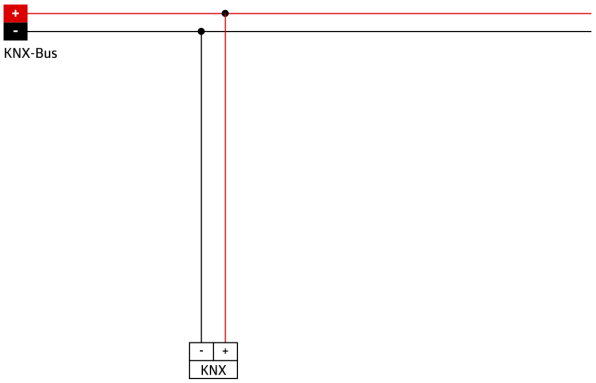
+
-
KNX-Bus
-
+
KNX

Set items

To receive the bundle according to the technical specification, please order the items listed.



PD9-KNXs-DX-FC
Art.No: 93520

Voltage: via KNX BUS
Dimensions: Sensor head: Ø 45 x 28 mm, Power supply: 129 x 29 x 22 mm
Typ. power input: 12 mA

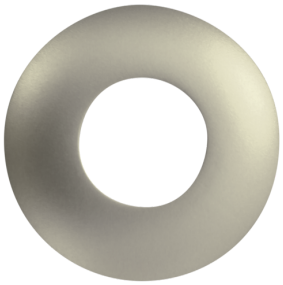

Cover ring PD9 Ø 45 mm
Art.No: 92346

Dimensions: Ø 45 mm
Material color: silver mat