# PD9-1C-12-48V-FC Set 92985-92958-92993



12–48 V PIR motion detector with 360° detection and a range of up to Ø10m (78 m²), with a dry contact

## Order data

| Designation | Colour | Art.No |
|---|---|---|
| PD9-1C-12-48V-FC | white | 92985 |
| Cover IP65 for Sensor head PD9 | transparent | 92958 |
| Square design frame PD9-FC | pure white | 92993 |

## Areas of application

- entrance halls
- corridors/hallways
- small offices

## Technical data

| | |
|---|---|
| Voltage: | 12 – 48 V AC / DC |
| Dimensions: | **Sensor head: Ø 45 x 37 mm, Power supply: 165 x 24 x 24 mm + 45 x 45 x 2.6 mm (92993)** |
| Power consumption: | < 0.25 W |
| Detection area: | horizontal 360° (Ceiling mounting) |
| Range: | max. Ø 10 m across<br>max. Ø 6 m towards<br>max. Ø 4 m seated |
| Monitored area (tangential movement): | 78 m² / 2.5 m mounting height |
| Mounting height min./max./recommended: | 2 m / 5 m / 2.5 m |
| Degree / class of protection: | **IP20 / Class II + IP65 (92958)** |
| Impact strength: | IK03 |
| Ambient temperature: | -25 °C to +50 °C |
| Housing: | polycarbonate, UV-resistant |
| Material color: | **pure white mat, similar to RAL9010 (92993)** |
| Cable length: | 45 cm |
| **Channel 1 (lighting control, potential-free (dry))** | |
| Switching power: | 1000 W, cos φ = 1<br>800 W LED<br>max. inrush current Ip (20 ms) = 165 A<br>max. inrush current Ip (200 µs) = 800 A |
| Type of contact (k): | 1x µ-contact, dry NO contact with tungsten pre-make contact |
| Follow-up time: | 30 sec – 30 min, Pulse |
| Switch-on threshold: | 10 – 2000 Lux |

## Product information

Set : PD9-1C-12-48V-FC + Cover IP65 for Sensor head PD9 transparent + Square design frame PD9-FC pure white mat, similar to RAL9010

Mini-motion detector with operating voltage 12-48 V

One channel for light switching

Easy installation on device

Power supply passes through the hole in the ceiling for the detector (34 mm Ø)

Spring clips for quick and easy installation in suspended ceilings and light fittings

Includes 45 mm cover ring and blinds

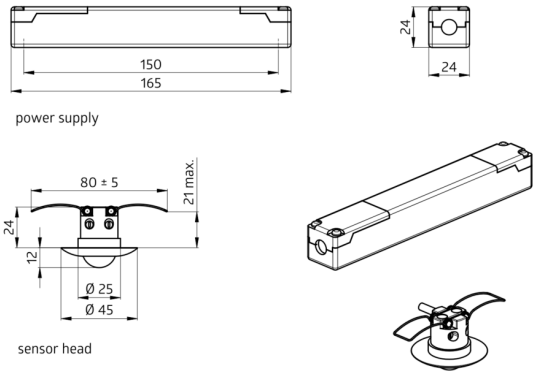
150
165
24
24
power supply
80 ± 5
21 max.
24
12
Ø 25
Ø 45
sensor head

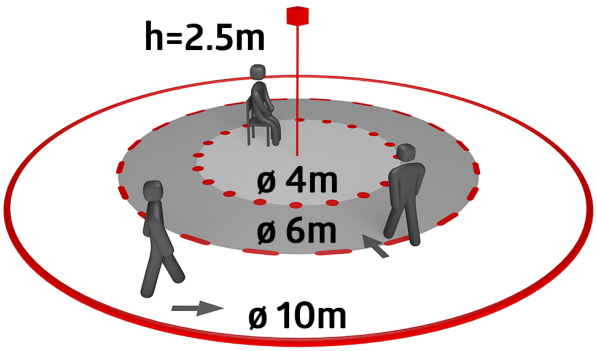
h=2.5m
ø 4m
ø 6m
ø 10m

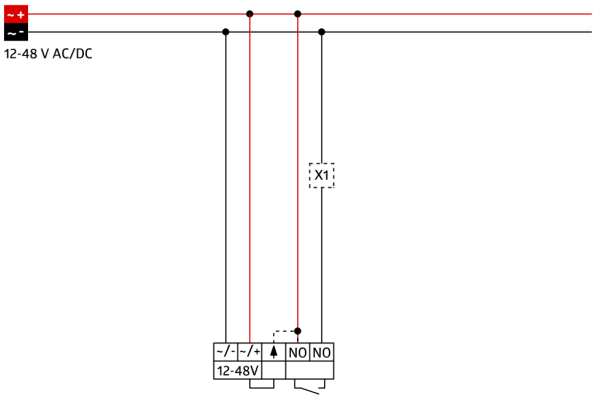
12-48 V AC/DC
X1
-/-
-/+
NO
NO
12-48V

## Set items

To receive the bundle according to the technical specification, please order the items listed.



**PD9-1C-12-48V-FC**
Art.No: 92985

Voltage: 12 – 48 V AC / DC
Dimensions: Sensor head: Ø 45 x 37 mm,
Power supply: 165 x 24 x 24 mm
Power consumption: < 0.25 W



**Cover IP65 for Sensor head PD9**
Art.No: 92958

Degree / class of protection: IP65
Housing: UV-resistant
Material color: transparent



**Square design frame PD9-FC**
Art.No: 92993

Dimensions: 45 x 45 x 2.6 mm
Housing: polycarbonate, UV-resistant
Material color: pure white mat,
similar to RAL9010