B.E.G. LUXOMAT® net



PD5N-LAMELLA-BMS2 DALI-2 BB

93358 EAN: 4007529933587

DALI-2 (BMS) PIR multisensor with 360° detection and a range of up to Ø10m (78 m²), DALI-2 input device for slatted ceilings

Order data

Designation	Colour	Art.No
PD5N-LAMELLA-BMS2 DALI-2 BB	black	93358

Technical data

Voltage:	via DALI Bus, max. 22.5 V DC
Dimensions:	55 x 20 x 44 mm
Settings:	via DALI-Bus and application which supports DALI multisensors according to IEC62386, parts 101, 103, 303 and 304
Typ. power input:	4.5 mA
Settling time:	200 ms
Detection area:	horizontal 360° (Ceiling mounting)
Range:	max. Ø 12 m across max. Ø 5 m towards max. Ø 4 m seated
Monitored area (tangential movement):	110 m² / 2.5 m mounting height
Mounting height min./max./recommended:	2 m / 5 m / 2.5 m
Degree / class of protection:	IP20 / Class II
Measured light output:	0 - 4095 Lux, Mixed light measuring
Ambient temperature:	-25 °C to +50 °C
Housing:	polycarbonate, UV-resistant
Material color:	black, similar to RAL9005
Cable length:	300 mm
Connections and wires:	plug WAGO 890-1112

Product information

DALI-2 multisensor (input device) for installation in lamella ceilings or luminaires

DALI-2 certified product

Powered via DALI bus

DALI multimaster technology according to IEC 62386 part 103

Instance 0 provides information regarding occupancy and movement for the DALI-Bus according to IEC 62386 part 303

Instance 1 provides LUX values for the DALI-Bus according to IEC 62386 part 304

Instances 2 to 6 provide information regarding the pressing of control buttons of a compatible mini-IR remote control according to IEC 62386 part 301 on the DALI bus

Parameterisation is possible via a mandatory Multimaster-Application-Controller of any manufacturer. This controller must support IEC 62386 parts 101/103/301/303/304.

Clip fastener for simple and uniform installation

Pre-assembled connection cable with plug-in system

Mixed light measurement with internal and external light sensor

Individual adaption of the PIR sensor sensitivity

Status LEDs can be activated / deactivated

Weighting of the light sensors adjustable

Bit resolution of light sensor adjustable

Reflection factor for calculated lux value adjustable

Bright LED indication for commissioning

Application examples:
staircases, small offices, open-plan offices, conference rooms, classrooms/seminar rooms

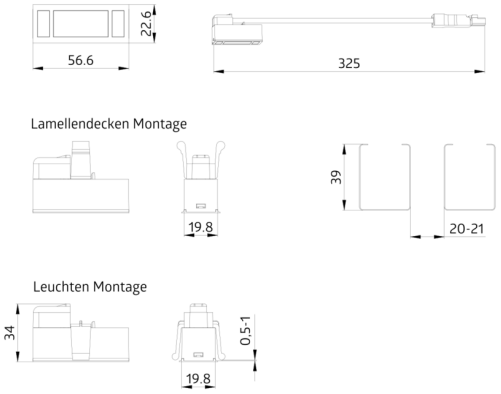
22.6
56.6
325
Lamellendecken Montage
19.8
39
20-21
Leuchten Montage
34
19.8
0.5-1

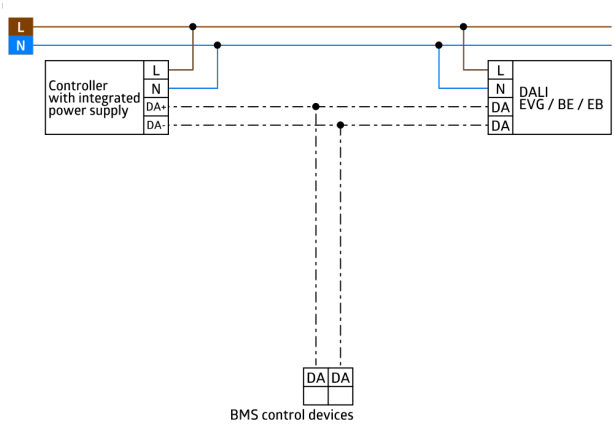
L
N
Controller
with integrated
power supply
L
N
DA+
DA-
L
N
DA
DA
DALI
EVG / BE / EB
DA
DA
BMS control devices

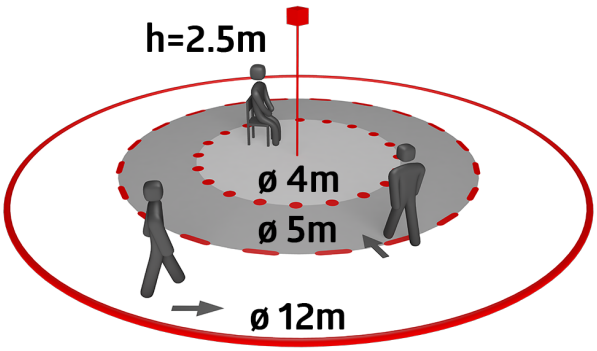
h=2.5m
ø 4m
ø 5m
ø 12m