B.E.G. LUXOMAT®



PD4N-S Set
93241-93787

Slave PIR motion detector with 360° coverage and a range of up to Ø24m (450 m²)

Order data

Designation	Colour	Art.No
PD4N-S	white	93241
SM socle mounting set IP54 PD4N H	traffic white	93787

Technical data

Voltage:	110 – 240 V AC 50 / 60 Hz
Dimensions:	**Ø 106 x 92 mm + Ø 110 x 45 mm (93787)**
Power consumption:	approx. 0.2 W
Detection area:	horizontal 360° (Ceiling mounting)
Range:	max. Ø 24 m across max. Ø 8 m towards max. Ø 6.4 m seated
Monitored area (tangential movement):	450 m² / 2.5 m mounting height
Mounting height min./max./recommended:	2 m / 10 m / 2.5 m
Degree / class of protection:	**IP54 (93787)**
Impact strength:	IK04
Ambient temperature:	-25 °C to +50 °C
Housing:	polycarbonate, UV-resistant
Material color:	**traffic white, similar to RAL9016 (93787)**
Pulse interval:	2 or 9 sec

Product information

Set : PD4N-S + SM socle mounting set IP54 PD4N H traffic white, similar to RAL9016

Slave device detector with extended detection area

For extending the detection area of a Master device

Trigger pulse to master device upon detected movement independent of the ambient light level

Compatible with 230 V devices. Concerning exceptions please see the respective master device.

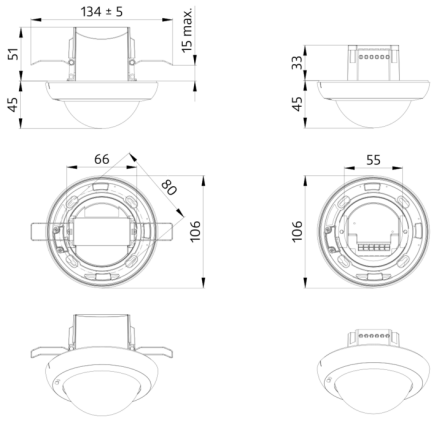
134 ± 5
15 max.
51
45
33
45
66
80
106
55
106

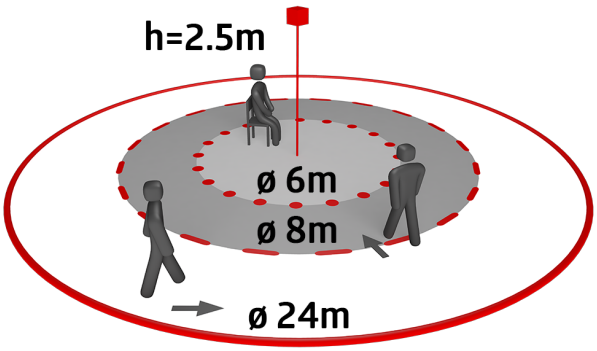
h=2.5m
ø 6m
ø 8m
ø 24m

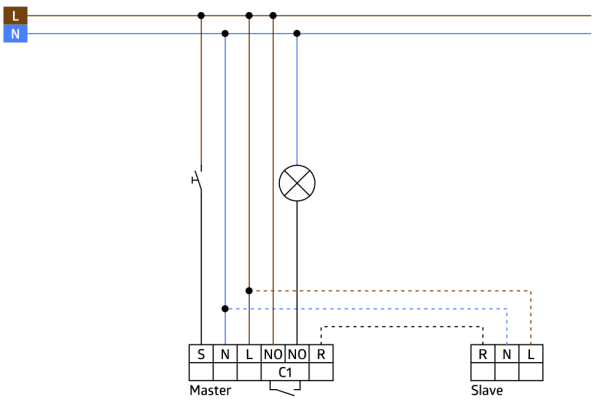
L
N
S
N
L
NO
NO
R
C1
Master
R
N
L
Slave

Set items

To receive the bundle according to the technical specification, please order the items listed.



PD4N-S
Art.No: 93241

Voltage: 110 – 240 V AC 50 / 60 Hz
Dimensions: Ø 106 x 92 mm
Power consumption: approx. 0.2 W



SM socle mounting set IP54 PD4N H
Art.No: 93787

Dimensions: Ø 110 x 45 mm
Degree / class of protection: IP54
Material color: traffic white, similar to RAL9016