B.E.G. LUXOMAT®



PD4N-M-DACO-PRO DALI-2

93353 EAN: 4007529933532

Occupancy detector with integrated DALI application controller for energy-efficient lighting control

DALI-2 certified product

Integrated DALI power supply and 4 push-button inputs

Areas of application

- small offices
- open-plan offices

Order data

Designation	Colour	Art.No
PD4N-M-DACO-PRO DALI-2	white	93353

Accessories

Designation	Colour	Art.No
IR-PD-GROUP	-	93113
SM socle mounting set IP54 PD4N H	anthracite	93786
SM socle mounting set IP54 PD4N H	white	93465
SM socle mounting set IP54 PD4N H	black	93788
SM socle mounting set IP54 PD4N H	traffic white	93787
Corridor lens PD4N type A	white	93073
lens PD4N, Cover ring	anthracite	93731
lens PD4N, Cover ring	black	93733
lens PD4N, Cover ring	traffic white	93732
Corridor lens PD4N type A, Cover ring	traffic white	93742

Corridor lens PD4N type A, Cover ring	anthracite	93741
Corridor lens PD4N type A, Cover ring	black	93743
Wire basket BSK (Ø 200 x 90 mm)	white	92199
Wall holder PD2N/4N Typ A	traffic white	93702
Wall holder PD2N/4N Typ A	anthracite	93701
Wall holder PD2N/4N Typ A	white	93700
Wall holder PD2N/4N Typ A	black	93703
Wall holder PD2N/4N Typ A	white	93164

Technical data

Voltage:	230 V AC ±10% 50 Hz
Dimensions:	Ø 84 x 85 mm
Power consumption:	approx. 2 W
Slave devices:	up to 8
Detection area:	horizontal 360° (Ceiling mounting)
Range:	max. Ø 24 m across max. Ø 8 m towards max. Ø 6.4 m seated
Monitored area (tangential movement):	450 m² / 2.5 m mounting height
Mounting height min./max./recommended:	2 m / 10 m / 2.5 m
Degree / class of protection:	IP20 / Class II
Impact strength:	IK05
Ambient temperature:	-25 °C to +50 °C
Housing:	polycarbonate, UV-resistant
Material color:	white mat, similar to RAL9010
Channel 1 (lighting control)	
DALI output:	80 mA (guaranteed), 125 mA (max.), shut down mechanism
Supported control gear:	DT5, DT6, DT7, DT8-Tc (HCL only possible with DT8-Tc, 2700 - 6500 K)
Supported control devices:	B.E.G. BMS (motion detection, measured light output)
Follow-up time:	1 min – 150 min
Orientation light:	5 – 100 % / OFF / 1 min – 255 min / ∞
Brightness set value:	10 – 2500 Lux
Light measuring:	Mixed light measuring

Product information

Occupancy detector with integrated DALI application controller for energy-efficient lighting control

DALI-2 certified product

Integrated DALI power supply and 4 push-button inputs

Adjustable communication mode "Broadcast" (1 light zone, without addressing) or "Multicast" (several light zones, HVAC, with addressing)

Up to 8 lighting groups can be created, with up to 4 profiles and 2 scenes possible per group

Manual switching or dimming via conventional pushbuttons

Quick commissioning and maintenance processes via Smartphone/Tablet App (Android, iOS) - Bluetooth required

Expandable with up to 8 B.E.G. BMS multi-sensors

Support for DALI-2 push buttons

Semi-automatic, full automatic, presence-independent or light-independent mode adjustable

Adjustable regulation dynamics (minimum and maximum values)

Over-the-air (OTA) firmware update: the firmware can be conveniently updated remotely without the need for cables

Adjustable speed and delay of the regulation

Mixed light measurement with internal and external light sensor

DALI output power can be increased with accessories

Integrated daylight harvesting circuit (or switch output)

Adjustable switch-on value

Last value - Reminder function for switch-on value

Adjustable brightness set value and reflection factor

Indication of the current light sensor value in the B.E.G. One App

Self-check and display of device errors in the B.E.G. One App

Status LEDs can be activated / deactivated

PIN code

Corridor function - Deactivates the possibility to switch off the light via the push-button

Partition wall function: In order to be able to respond to changes in room geometry, B.E.G. BMS detectors can be used to flexibly adjust the lighting groups of two rooms

Number of DALI participants can be determined quickly and

reliably via the B.E.G. Online DALI Line Planner

Factory setting 10 min follow-up time and 500 lux brightness set value

Including pre-assembled spring clamp with strain relief and contact protection cap for recessed ceiling mounting

Accessory for surface mounting available

Application examples:
small offices, open-plan offices

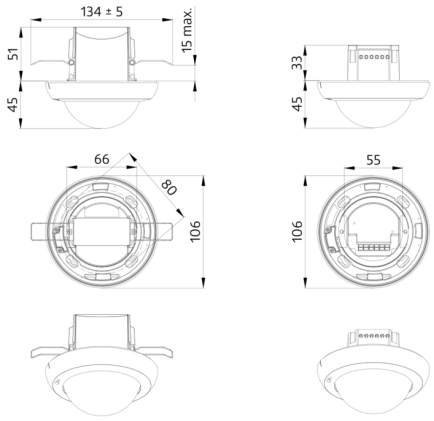
134 ± 5
15 max.
51
45
33
45
66
80
106
55
106

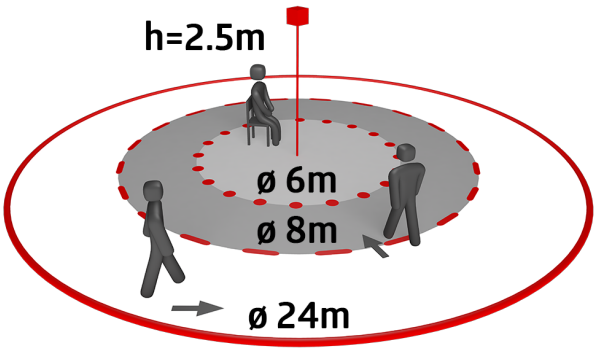
h=2.5m
ø 6m
ø 8m
ø 24m

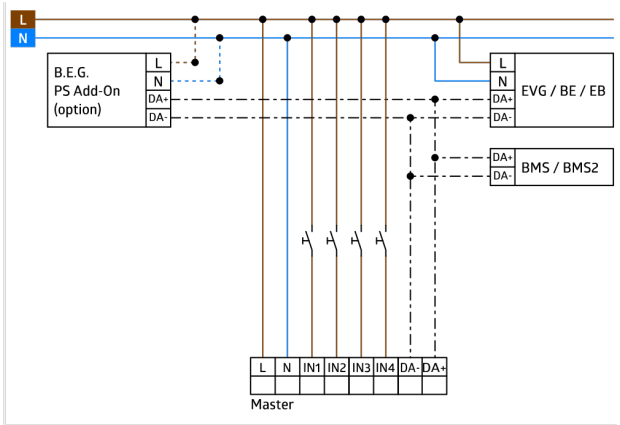
L
N
B.E.G.
PS Add-On
(option)
L
N
DA+
DA-
L
N
DA+
DA-
EVG / BE / EB
DA+
DA-
BMS / BMS2
L
N
IN1
IN2
IN3
IN4
DA-
DA+
Master

Accessories



IR-PD-GROUP
Art.No: 93113

Battery: 3.0 V Lithium CR2032 (inclusive)
Dimensions: 80 x 60 x 8 mm
Material color: -



SM socle mounting set IP54 PD4N H
Art.No: 93786

Dimensions: Ø 110 x 45 mm
Degree / class of protection: IP54
Material color: anthracite, similar to RAL7016



SM socle mounting set IP54 PD4N H
Art.No: 93465

Dimensions: Ø 110 x 45 mm
Degree / class of protection: IP54
Material color: white, similar to RAL9010



SM socle mounting set IP54 PD4N H
Art.No: 93788

Dimensions: Ø 110 x 45 mm
Degree / class of protection: IP54
Material color: black, similar to RAL9005



SM socle mounting set IP54 PD4N H
Art.No: 93787

Dimensions: Ø 110 x 45 mm
Degree / class of protection: IP54
Material color: traffic white, similar to RAL9016



Corridor lens PD4N type A
Art.No: 93073

Detection area: horizontal 360° (Ceiling mounting)
Range: max. Ø 40 m across
max. Ø 20 m towards
Monitored area (tangential movement): 250 m² / 2.5 m mounting height



lens PD4N, Cover ring
Art.No: 93731

Detection area: horizontal 360° (Ceiling mounting)
Range: max. Ø 24 m across
max. Ø 8 m towards
max. Ø 6.4 m seated
Monitored area (tangential movement): 450 m² / 2.5 m mounting height



lens PD4N, Cover ring
Art.No: 93733

Detection area: horizontal 360° (Ceiling mounting)
Range: max. Ø 24 m across
max. Ø 8 m towards
max. Ø 6.4 m seated
Monitored area (tangential movement): 450 m² / 2.5 m mounting height

lens PD4N, Cover ring
Art.No: 93732

Detection area: horizontal 360° (Ceiling mounting)
Range: max. Ø 24 m across
max. Ø 8 m towards
max. Ø 6.4 m seated
Monitored area (tangential movement): 450 m² / 2.5 m mounting height



Corridor lens PD4N type A, Cover ring
Art.No: 93742

Detection area: horizontal 360° (Ceiling mounting)
Range: max. Ø 40 m across
max. Ø 20 m towards
Monitored area (tangential movement): 250 m² / 2.5 m mounting height



Corridor lens PD4N type A, Cover ring
Art.No: 93741

Detection area: horizontal 360° (Ceiling mounting)
Range: max. Ø 40 m across
max. Ø 20 m towards
Monitored area (tangential movement): 250 m² / 2.5 m mounting height



Corridor lens PD4N type A, Cover ring
Art.No: 93743

Detection area: horizontal 360° (Ceiling mounting)
Range: max. Ø 40 m across
max. Ø 20 m towards
Monitored area (tangential movement): 250 m² / 2.5 m mounting height

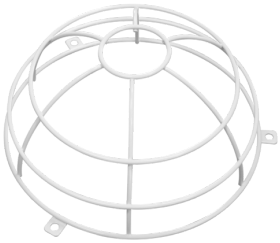

Wire basket BSK (Ø 200 x 90 mm)
Art.No: 92199

Dimensions: Ø 200 x 90 mm
Impact strength: IK09
Housing: coated steel basket

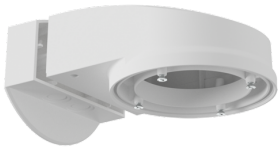

Wall holder PD2N/4N Typ A
Art.No: 93702

Dimensions: 133 x 106 x 66 mm
Degree / class of protection: IP54 / Class II
Housing: polycarbonate, UV-resistant

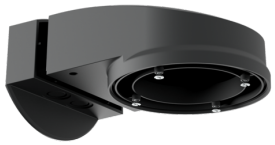

Wall holder PD2N/4N Typ A
Art.No: 93701

Dimensions: 133 x 106 x 66 mm
Degree / class of protection: IP54 / Class II
Housing: polycarbonate, UV-resistant

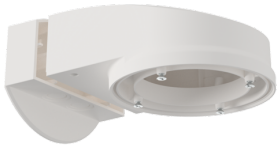

Wall holder PD2N/4N Typ A
Art.No: 93700

Dimensions: 133 x 106 x 66 mm
Degree / class of protection: IP54 / Class II
Housing: polycarbonate, UV-resistant

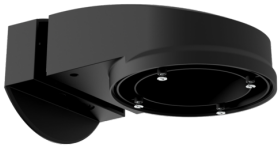

Wall holder PD2N/4N Typ A
Art.No: 93703

Dimensions: 133 x 106 x 66 mm
Degree / class of protection: IP54 / Class II
Housing: polycarbonate, UV-resistant



Wall holder PD2N/4N Typ A
Art.No: 93164

Dimensions: 133 x 106 x 66 mm
Degree / class of protection: IP54 /
Housing: polycarbonate, UV-resistant