

PD4N-M-DACO-DUO DALI-2 Set 93461-93073-92199

DALI-2 PIR motion detector with integrated DALI application controller, 360° detection, and a range of up to Ø24m (450 m²), 2 DALI channels

Order data

Designation	Colour	Art.No
PD4N-M-DACO-DUO DALI-2	white	93461
Corridor lens PD4N type A	white	93073
Wire basket BSK (Ø 200 x 90 mm)	white	92199

Areas of application

- entrance halls
- corridors/hallways
- small offices
- open-plan offices
- conference rooms
- classrooms/seminar rooms
- sports halls/ storage rooms

Technical data

Voltage:	230 V AC ±10% 50 Hz
Dimensions:	**Ø 200 x 90 mm (92199)**
Power consumption:	approx. 3 W
Slave devices:	up to 4
Detection area:	**horizontal 360° (Ceiling mounting) (93073)**
Range:	**max. Ø 40 m across max. Ø 20 m towards (93073)**
Monitored area (tangential movement):	**250 m² / 2.5 m mounting height (93073)**
Mounting height min./max./recommended:	**2.4 m / 2.6 m / 2.5 m (93073)**
Degree / class of protection:	IP20 / Class II
Impact strength:	**IK09 (92199)**
Ambient temperature:	-25 °C to +50 °C
Housing:	**polycarbonate, UV-resistant + coated steel basket (92199)**
Material color:	**white, similar to RAL9010 (93073)**
Channel 1 and Channel 2 (lighting control)	
DALI output:	40 mA (guaranteed), 60 mA (max.), shut down mechanism
Supported control gear:	DT0, DT5, DT6, DT7
Supported control devices:	- (single master)
Follow-up time:	1 min – 150 min
Orientation light:	5 – 100 % / OFF / 5 min – 60 min / ∞
Brightness set value:	10 – 2500 Lux
Light measuring:	Mixed light measuring

Product information

Set : PD4N-M-DACO-DUO DALI-2 + Corridor lens PD4N type A white, similar to RAL9010 + Wire basket BSK (Ø 200 x 90 mm) white

Occupancy detector with integrated DALI application controller for energy-efficient lighting control

2 channels

DALI-2 certified product

Integrated DALI power supply

DALI interface for controlling digital, dimmable ECGs in broadcast mode

Manual switching or dimming via conventional pushbuttons

Bidirectional IR communication enables fast integration into the project management function of the B.E.G. One app

Complete range of functions can only be activated using the BLE-IR-Adapter and a compatible Smartphone or Tablet (Android, iOS).

Semi-automatic, full automatic, presence-independent or light-independent mode adjustable

Adjustable regulation dynamics (minimum and maximum values)

Adjustable speed and delay of the regulation

Single master version, not networkable

Detection area can be extended by using slave devices

Mixed light measurement with internal and external light sensor

DALI output power can be increased with accessories

Integrated daylight harvesting circuit (or switch output)

Adjustable switch-on value

Last value - Reminder function for switch-on value

Adjustable brightness set value and reflection factor

Indication of the current light sensor value in the B.E.G. One App

Self-check and display of device errors in the B.E.G. One App

Status LEDs can be activated / deactivated

PIN code

Corridor function - Deactivates the possibility to switch off the light via the push-button

Number of DALI participants can be determined quickly and reliably via the B.E.G. Online DALI Line Planner

Software is backwards compatible with the first generation (except DSI, double lock and corridor function)

Factory setting 10 min follow-up time and 500 lux brightness set value

Including pre-assembled spring clamp with strain relief and contact protection cap for recessed ceiling mounting

Accessory for surface mounting available

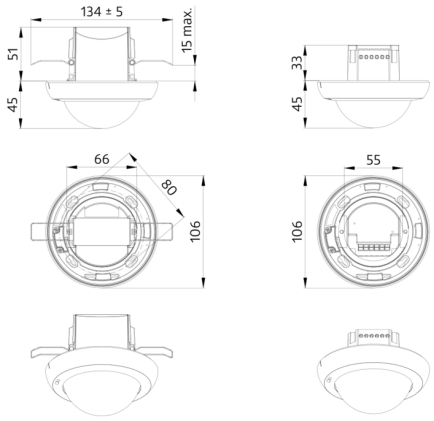
134 ± 5
15 max.
51
45
33
45
66
80
106
55
106

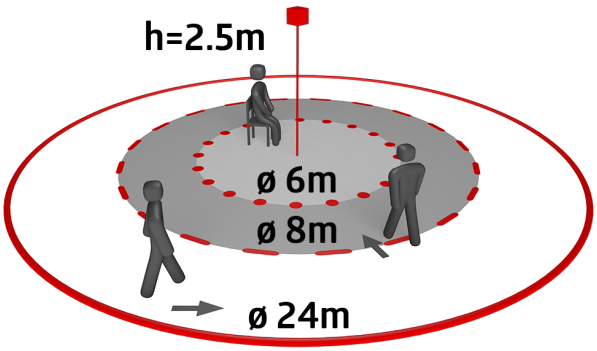
h=2.5m
ø 6m
ø 8m
ø 24m

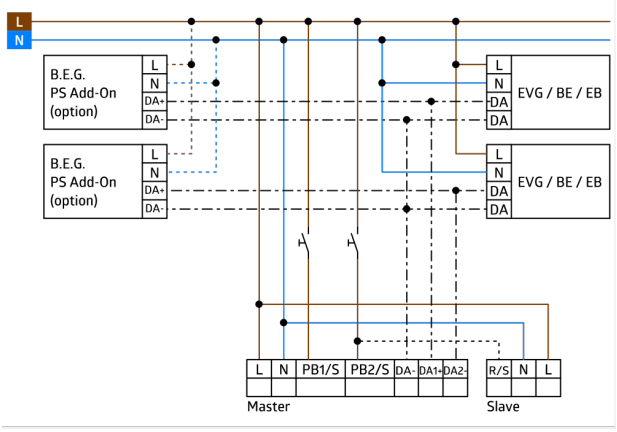
L
N
B.E.G.
PS Add-On
(option)
L
N
DA+
DA-
EVG / BE / EB
DA
DA
B.E.G.
PS Add-On
(option)
EVG / BE / EB
L
N
PB1/S
PB2/S
DA-
DA1+
DA2-
Master
R/S
N
L
Slave

Set items

To receive the bundle according to the technical specification, please order the items listed.



PD4N-M-DACO-DUO DALI-2
Art.No: 93461

Voltage: 230 V AC ±10% 50 Hz
Dimensions: Ø 106 x 95 mm
Power consumption: approx. 3 W



Corridor lens PD4N type A
Art.No: 93073

Detection area: horizontal 360° (Ceiling mounting)
Range: max. Ø 40 m across
max. Ø 20 m towards
Monitored area (tangential movement): 250 m² / 2.5 m mounting height

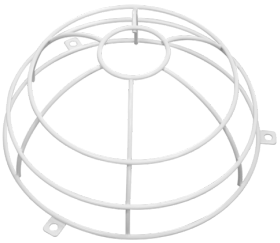

Wire basket BSK (Ø 200 x 90 mm)
Art.No: 92199

Dimensions: Ø 200 x 90 mm
Impact strength: IK09
Housing: coated steel basket