B.E.G. LUXOMAT® net



PD4N-KNXs-ST-FM Set
93515-93752-93742

KNX PIR motion detector (standard) with 360° coverage and a range of up to Ø24m (450 m²)

Order data

Designation	Colour	Art.No
PD4N-KNXs-ST-FM	white	93515
SM socle mounting set IP54 PD2N- / PD4N-FM	traffic white	93752
Corridor lens PD4N type A, Cover ring	traffic white	93742

Technical data

Voltage:	via KNX BUS
Dimensions:	**Ø 106 x 55 mm + Ø 109 x 19 mm (93752)**
Typ. power input:	12 mA
Detection area:	**horizontal 360° (Ceiling mounting) (93742)**
Range:	**max. Ø 40 m across max. Ø 20 m towards (93742)**
Monitored area (tangential movement):	**250 m² / 2.5 m mounting height (93742)**
Mounting height min./max./recommended:	**2.4 m / 2.6 m / 2.5 m (93742)**
Degree / class of protection:	**IP20 / Class III + IP54 (93752)**
Impact strength:	IK04
Ambient temperature:	-25 °C to +55 °C
Housing:	polycarbonate, UV-resistant
Material color:	**traffic white mat, similar to RAL9016 (93742)**
Number of light sensors:	2
Number of PIR sensors:	4
KNX TP 256:	Yes
KNX Secure:	Yes
Orientation light:	5 – 100 % / OFF / 1 min – 255 min
Night light:	5 – 100 %
Brightness set value:	5 – 2000 Lux

Product information

Set : PD4N-KNXs-ST-FM + SM socle mounting set IP54 PD2N- / PD4N-FM traffic white mat, similar to RAL9016 + Corridor lens PD4N type A, Cover ring traffic white mat, similar to RAL9016

KNX occupancy detector with integrated KNX bus connector

KNX Secure ready

Parameterisation from ETS 5 for integration into KNX systems

Individual adaption of detection sensitivity for each PIR sensor

PIR sensors can be deactivated individually

Direction of movement can be identified

Mixed light measurement using internal, external and remote (optional) light sensors

Intelligent semi-automatic mode, occupancy-independent regulating mode (photoelectric switch), full automatic mode

1 x Light (for regulating or switching), 1 x slave output, 3 separate HVAC-blocs

Regulation of up to three lighting groups using offset (external influence possible)

Short presence, self-adjusting follow-up time, corridor function

Various locking functions

Soft-start

Recall of light scenes

Deactivatable status indicators

The product database for import into the ETS database can be downloaded from the B.E.G. homepage.

Detection area can be extended thanks to master-slave-mode

Extensive optimization options for light measurement

Measured light value is communicated to the bus

Adaption of dimming curve

Bidirectionally remote control-capable with the IR adapter and the B.E.G. smartphone app

PIN code

IR remote control-capable via IR remote control (optionally)

Programming button (phys. address) can be operated via remote control

HVAC mode (0=automatic, 1=comfort, 2=stand-by, 3=economy, 4=antifreeze/heat protection)

Manual influence via external KNX push buttons possible

Function control (heartbeat, cyclical sending)

Forced switch-off

Intelligent central-off function

Premonition of switch-off

Burn-in function for fluorescent lamps selectable from 1h till 100h

Behaviour upon bus voltage return definable at choice

Variable safety pause after switching off the lights

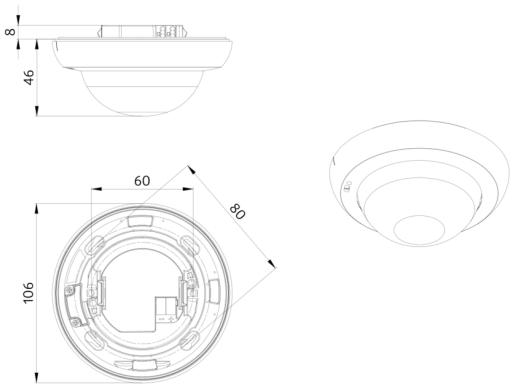
8
46
60
80
106

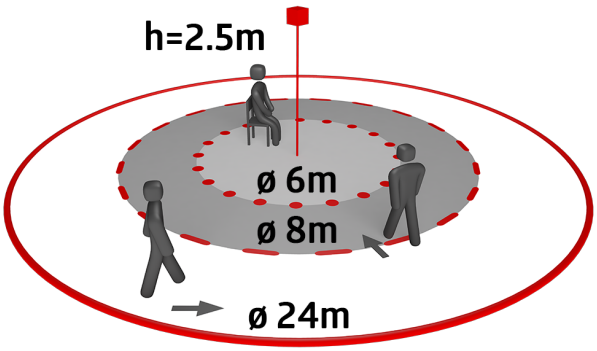
h=2.5m
ø 6m
ø 8m
ø 24m

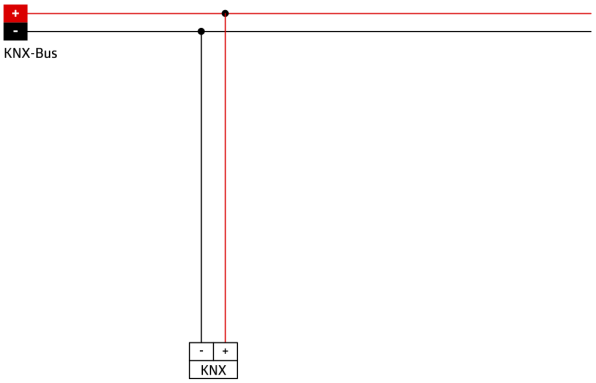
+
-
KNX-Bus
-
+
KNX

Set items

To receive the bundle according to the technical specification, please order the items listed.



PD4N-KNXs-ST-FM
Art.No: 93515

Voltage: via KNX BUS
Dimensions: Ø 106 x 55 mm
Typ. power input: 12 mA



SM socle mounting set IP54 PD2N- / PD4N-FM
Art.No: 93752

Dimensions: Ø 109 x 19 mm
Degree / class of protection: IP54
Housing: polycarbonate, UV-resistant



Corridor lens PD4N type A, Cover ring
Art.No: 93742

Detection area: horizontal 360° (Ceiling mounting)
Range: max. Ø 40 m across
max. Ø 20 m towards
Monitored area (tangential movement): 250 m² / 2.5 m mounting height