B.E.G. LUXOMAT® net



# PD4N-KNXs-BA-FM Set
# 93536-93743-92199

KNX PIR motion detector (Basic) with 360° coverage and a range of up to Ø24m (450 m²)

## Order data

| Designation | Colour | Art.No |
|---|---|---|
| PD4N-KNXs-BA-FM | white | 93536 |
| Corridor lens PD4N type A, Cover ring | black | 93743 |
| Wire basket BSK (Ø 200 x 90 mm) | white | 92199 |

## Technical data

| | |
|---|---|
| Voltage: | via KNX BUS |
| Dimensions: | **Ø 200 x 90 mm (92199)** |
| Typ. power input: | 12 mA |
| Detection area: | **horizontal 360° (Ceiling mounting) (93743)** |
| Range: | **max. Ø 40 m across max. Ø 20 m towards (93743)** |
| Monitored area (tangential movement): | **250 m² / 2.5 m mounting height (93743)** |
| Mounting height min./max./recommended: | **2.4 m / 2.6 m / 2.5 m (93743)** |
| Degree / class of protection: | IP20 / Class III |
| Impact strength: | **IK09 (92199)** |
| Ambient temperature: | -25 °C to +55 °C |
| Housing: | **polycarbonate, UV-resistant + coated steel basket (92199)** |
| Material color: | **black mat, similar to RAL9005 (93743)** |
| Number of light sensors: | 2 |
| Number of PIR sensors: | 4 |
| KNX TP 256: | Yes |
| KNX Secure: | Yes |
| Brightness set value: | 5 – 2000 Lux |

## Product information

Set : PD4N-KNXs-BA-FM + Corridor lens PD4N type A, Cover ring black mat, similar to RAL9005 + Wire basket BSK (Ø 200 x 90 mm) white

KNX occupancy detector with integrated KNX bus connector

KNX Secure ready

Individual adaption of detection sensitivity for each PIR sensor

Mixed light measurement using internal, external and remote (optional) light sensors

Intelligent semi-automatic mode, occupancy-independent regulating mode (photoelectric switch), full automatic mode

1 x light output (for regulating or switching), 1 x slave output

Soft-start

Deactivatable status indicators

Detection area can be extended thanks to master-slave-mode

Extensive optimization options for light measurement

Measured light value is communicated to the bus

Manual influence via external KNX push buttons possible

Behaviour upon bus voltage return definable at choice

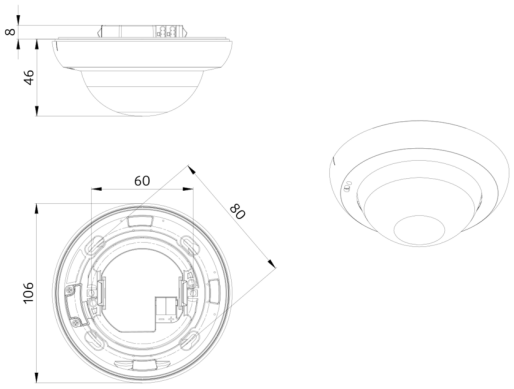
8
46
60
80
106

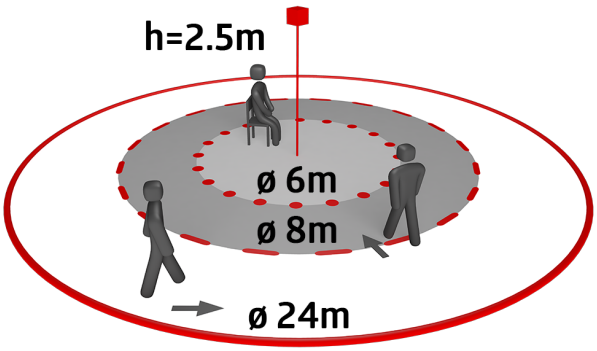
h=2.5m
ø 6m
ø 8m
ø 24m

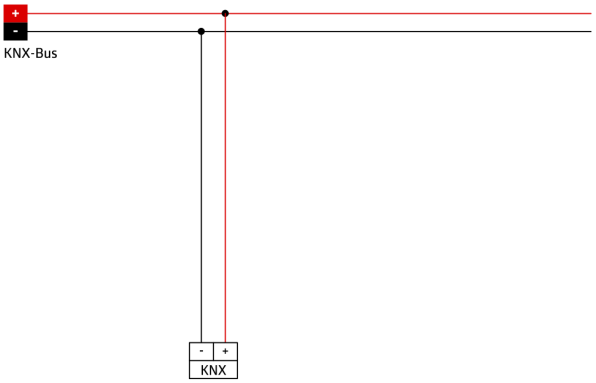
+
-
KNX-Bus
-
+
KNX

## Set items

To receive the bundle according to the technical specification, please order the items listed.



**PD4N-KNXs-BA-FM**
Art.No: 93536

Voltage: via KNX BUS
Dimensions: Ø 106 x 55 mm
Typ. power input: 12 mA



**Corridor lens PD4N type A, Cover ring**
Art.No: 93743

Detection area: horizontal 360° (Ceiling mounting)
Range: max. Ø 40 m across
max. Ø 20 m towards
Monitored area (tangential movement): 250 m² / 2.5 m mounting height

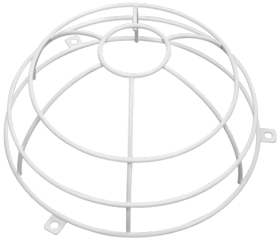

**Wire basket BSK (Ø 200 x 90 mm)**
Art.No: 92199

Dimensions: Ø 200 x 90 mm
Impact strength: IK09
Housing: coated steel basket