B.E.G. LUXOMAT® net



PD4N-KNXs-BA-FM Set 93536-93307

KNX PIR motion detector (Basic) with 360° coverage and a range of up to Ø24m (450 m²)

Order data

Designation	Colour	Art.No
PD4N-KNXs-BA-FM	white	93536
SM socle mounting set IP54 PD2N- / PD4N-FM	white	93307

Technical data

Voltage:	via KNX BUS
Dimensions:	**Ø 106 x 55 mm + Ø 109 x 19 mm (93307)**
Typ. power input:	12 mA
Detection area:	horizontal 360° (Ceiling mounting)
Range:	max. Ø 24 m across max. Ø 8 m towards max. Ø 6.4 m seated
Monitored area (tangential movement):	450 m² / 2.5 m mounting height
Mounting height min./max./recommended:	2 m / 10 m / 2.5 m
Degree / class of protection:	**IP20 / Class III + IP54 (93307)**
Impact strength:	IK04
Ambient temperature:	-25 °C to +55 °C
Housing:	polycarbonate, UV-resistant
Material color:	**white, similar to RAL9010 (93307)**
Number of light sensors:	2
Number of PIR sensors:	4
KNX TP 256:	Yes
KNX Secure:	Yes
Brightness set value:	5 – 2000 Lux

Product information

Set : PD4N-KNXs-BA-FM + SM socle mounting set IP54 PD2N- / PD4N-FM white, similar to RAL9010

KNX occupancy detector with integrated KNX bus connector

KNX Secure ready

Individual adaption of detection sensitivity for each PIR sensor

Mixed light measurement using internal, external and remote (optional) light sensors

Intelligent semi-automatic mode, occupancy-independent regulating mode (photoelectric switch), full automatic mode

1 x light output (for regulating or switching), 1 x slave output

Soft-start

Deactivatable status indicators

Detection area can be extended thanks to master-slave-mode

Extensive optimization options for light measurement

Measured light value is communicated to the bus

Manual influence via external KNX push buttons possible

Behaviour upon bus voltage return definable at choice

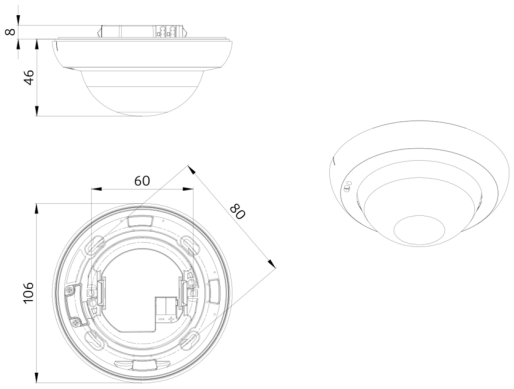
8
46
60
80
106

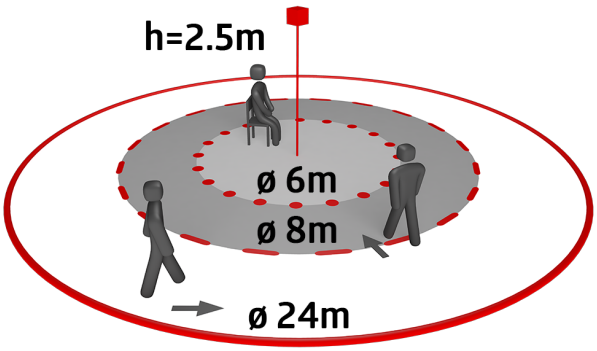
h=2.5m
ø 6m
ø 8m
ø 24m

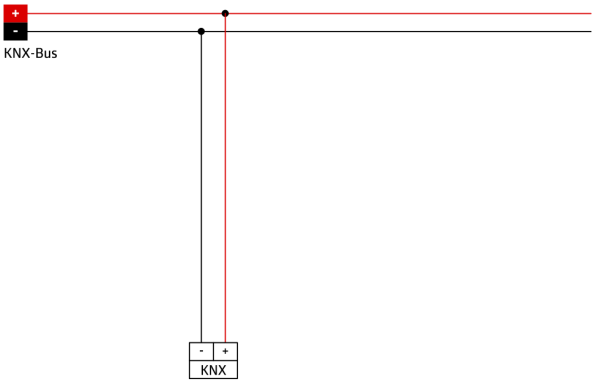
+
-
KNX-Bus
-
+
KNX

Set items

To receive the bundle according to the technical specification, please order the items listed.



PD4N-KNXs-BA-FM
Art.No: 93536

Voltage: via KNX BUS
Dimensions: Ø 106 x 55 mm
Typ. power input: 12 mA



SM socle mounting set IP54 PD2N- / PD4N-FM
Art.No: 93307

Dimensions: Ø 109 x 19 mm
Degree / class of protection: IP54
Material color: white, similar to RAL9010