B.E.G. LUXOMAT® net



PD4N-DALI-SYS Set 93340-93753-93743-92199

DALI-SYS PIR motion detector with 360° detection and a range of up to Ø24m (450 m²), for integration into DALI-SYS systems

Order data

Designation	Colour	Art.No
PD4N-DALI-SYS	white	93340
SM socle mounting set IP54 PD2N- / PD4N-FM	black	93753
Corridor lens PD4N type A, Cover ring	black	93743
Wire basket BSK (Ø 200 x 90 mm)	white	92199

Technical data

Voltage:	via DALI Bus, max. 22.5 V DC
Dimensions:	**Ø 200 x 90 mm (92199)**
Settings:	B.E.G. DALI-SYS ROUTER / B.E.G. DALI-SYS PC-Tools
Typ. power input:	7 mA
Detection area:	**horizontal 360° (Ceiling mounting) (93743)**
Range:	**max. Ø 40 m across max. Ø 20 m towards (93743)**
Monitored area (tangential movement):	**250 m² / 2.5 m mounting height (93743)**
Mounting height min./max./recommended:	**2.4 m / 2.6 m / 2.5 m (93743)**
Degree / class of protection:	**IP20 / Class II + IP54 (93753)**
Impact strength:	**IK09 (92199)**
Ambient temperature:	-25 °C to +55 °C
Housing:	**polycarbonate, UV-resistant + coated steel basket (92199)**
Material color:	**black mat, similar to RAL9005 (93743)**
Follow-up time:	1 sec – 120 min
Orientation light:	5 – 100 % / 1 min – 120 min / ∞
Brightness set value:	10 – 2500 Lux
Light measuring:	Mixed light measuring

Product information

Set : PD4N-DALI-SYS + SM socle mounting set IP54 PD2N- / PD4N-FM black mat, similar to RAL9005 + Corridor lens PD4N type A, Cover ring black mat, similar to RAL9005 + Wire basket BSK (Ø 200 x 90 mm) white

Wide motion detection range DALI multisensor

Powered via DALI bus

Seemless integration in B.E.G. LUXOMAT®net DALI-SYS

Bright LED indication for commissioning

Detection area can be extended thanks to master-slave-mode

Mixed light measurement with internal and external light sensor

Semi-automatic, full-automatic or twilight switch mode

Integrated daylight harvesting circuit (or switch output)

Guided Light, Soft-Start PLUS, Orientation light PLUS

Works out-of-the box for easy installation check

Full range of functions can only be activated with other products of the product group B.E.G. LUXOMAT®net DALI-SYS

Suitable for mounting in false ceilings and flush-mounting

Accessory for surface mounting available

This article is a component of a lighting control system from B.E.G., which supports the use of DALI control gear (luminaires, relays) from other manufacturers

The use of DALI application controllers from other manufacturers is not supported

The use of DALI input devices (sensors, push-buttons) from other manufacturers is not supported

Additional system components (hardware) from B.E.G. are required

Additional services (planning, commissioning and maintenance) from B.E.G. are required

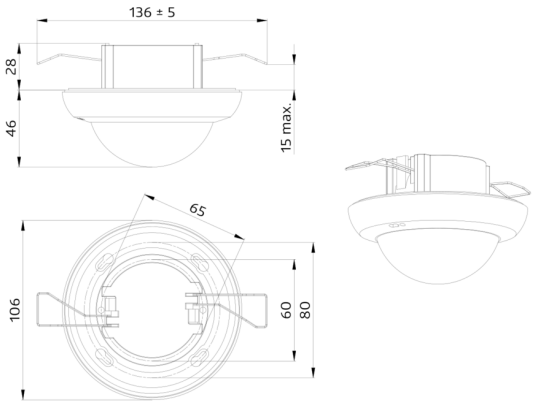
136 ± 5
28
46
15 max.
65
106
60
80

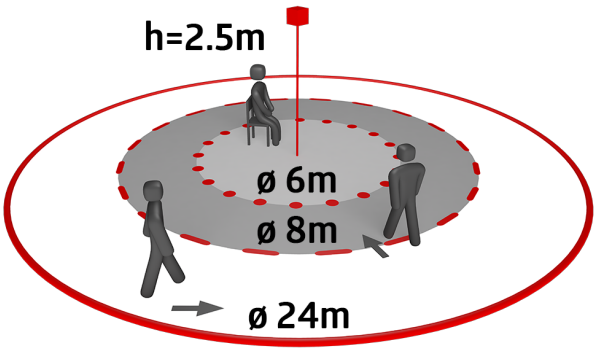
h=2.5m
ø 6m
ø 8m
ø 24m

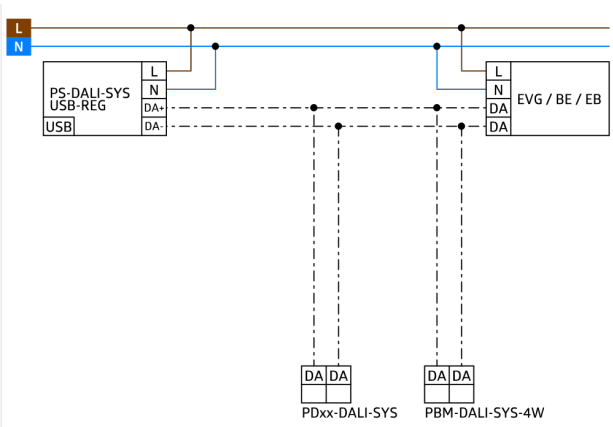
L
N
PS-DALI-SYS
USB-REG
USB
L
N
DA+
DA-
L
N
DA
DA
EVG / BE / EB
DA DA
PDxx-DALI-SYS
DA DA
PBM-DALI-SYS-4W

Set items

To receive the bundle according to the technical specification, please order the items listed.



PD4N-DALI-SYS
Art.No: 93340

Voltage: via DALI Bus, max. 22.5 V DC
Dimensions: Ø 106 x 68 mm
Settings: B.E.G. DALI-SYS ROUTER / B.E.G. DALI-SYS PC-Tools



SM socle mounting set IP54 PD2N- / PD4N-FM
Art.No: 93753

Dimensions: Ø 109 x 19 mm
Degree / class of protection: IP54
Housing: polycarbonate, UV-resistant



Corridor lens PD4N type A, Cover ring
Art.No: 93743

Detection area: horizontal 360° (Ceiling mounting)
Range: max. Ø 40 m across
max. Ø 20 m towards
Monitored area (tangential movement): 250 m² / 2.5 m mounting height

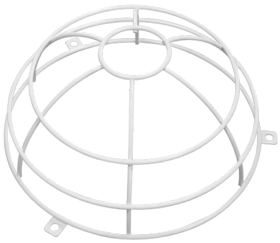

Wire basket BSK (Ø 200 x 90 mm)
Art.No: 92199

Dimensions: Ø 200 x 90 mm
Impact strength: IK09
Housing: coated steel basket