B.E.G. LUXOMAT® net



PD4N-CAS Set
93474-93733

CASAMBI-compatible PIR motion sensor with 360° detection and a range of up to Ø24m (450 m²)

Order data

Designation	Colour	Art.No
PD4N-CAS	white	93474
lens PD4N, Cover ring	black	93733

Technical data

Voltage:	230 V AC ±10% 50 Hz
Dimensions:	Ø 106 x 95 mm
Settings:	Casambi App
Power consumption:	0.5 W
Detection area:	horizontal 360° oval (Ceiling mounting)
Range:	max. Ø 24 m across max. Ø 8 m towards max. Ø 6.4 m seated
Monitored area (tangential movement):	450 m² / 2.5 m mounting height
Mounting height min./max./recommended:	2 m / 10 m / 2.5 m
Degree / class of protection:	IP20 / Class II
Impact strength:	IK04
Ambient temperature:	-5 °C to +45 °C
Housing:	polycarbonate, UV-resistant
Material color:	**black mat, similar to RAL9005 (93733)**
Number of PIR sensors:	4
Channel 1 (lighting control)	
Follow-up time:	1 sec – 60 min
Brightness set value:	1 – 4000 Lux
Light measuring:	Mixed light measuring

Product information

Set : PD4N-CAS + lens PD4N, Cover ring black mat, similar to RAL9005

Casambi-enabled occupancy detector

Bright LED indication for commissioning

Mixed light measurement with internal and external light sensor

Weighting between internal and external light sensor can be adapted to suit the application

Adjustment of the reflection factor and input of the luminosity for the display of the actual luminosity in the app

Extension of the detection area with additional B.E.G. Casambi devices possible

Individual adaption of detection sensitivity for each PIR sensor

Detection area can be restricted with blinds

Functions adjustable via Casambi app

Including pre-assembled spring clamp with strain relief and contact protection cap for recessed ceiling mounting

Accessory for surface mounting available

Accessories for wall mounting optionally available

Further accessories for colour matching optionally available

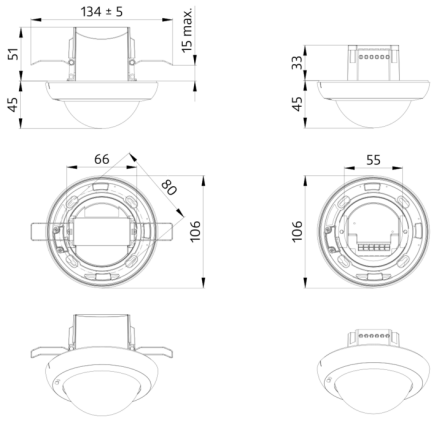

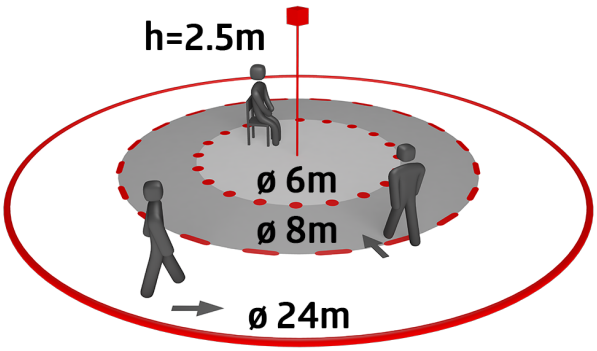

CASAMBI

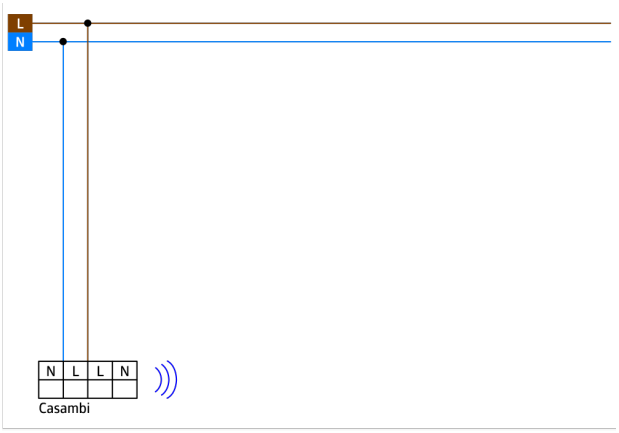
L
N
N L L N
Casambi

Set items

To receive the bundle according to the technical specification, please order the items listed.



PD4N-CAS
Art.No: 93474

Voltage: 230 V AC ±10% 50 Hz
Dimensions: Ø 106 x 95 mm
Settings: Casambi App



lens PD4N, Cover ring
Art.No: 93733

Detection area: horizontal 360° (Ceiling mounting)
Range: max. Ø 24 m across
max. Ø 8 m towards
max. Ø 6.4 m seated
Monitored area (tangential movement): 450 m² / 2.5 m mounting height