B.E.G. LUXOMAT® net



PD4N-CAS DALI-2 Set 93473-93787-92199

CASAMBI-compatible PIR motion sensor with built-in DALI-2 bus power supply, 360° detection, and a range of up to Ø24m (450 m²)

Order data

Designation	Colour	Art.No
PD4N-CAS DALI-2	white	93473
SM socle mounting set IP54 PD4N H	traffic white	93787
Wire basket BSK (Ø 200 x 90 mm)	white	92199

Technical data

Voltage:	230 V AC ±10% 50 Hz
Dimensions:	**Ø 200 x 90 mm (92199)**
Settings:	Casambi App
Power consumption:	0.5 W
Detection area:	horizontal 360° oval (Ceiling mounting)
Range:	max. Ø 24 m across max. Ø 8 m towards max. Ø 6.4 m seated
Monitored area (tangential movement):	450 m² / 2.5 m mounting height
Mounting height min./max./recommended:	2 m / 10 m / 2.5 m
Degree / class of protection:	**IP54 (93787)**
Impact strength:	**IK09 (92199)**
Ambient temperature:	-5 °C to +45 °C
Housing:	**polycarbonate, UV-resistant + coated steel basket (92199)**
Material color:	**traffic white, similar to RAL9016 (93787)**
Number of PIR sensors:	4
Channel 1 (lighting control)	
DALI output:	80 mA (guaranteed), 125 mA (max.), shut down mechanism
Supported control gear:	DT0, DT5, DT6, DT7, DT8
Supported control devices:	- (single master)
Follow-up time:	1 sec – 60 min
Brightness set value:	1 – 4000 Lux
Light measuring:	Mixed light measuring

Product information

Set : PD4N-CAS DALI-2 + SM socle mounting set IP54 PD4N H traffic white, similar to RAL9016 + Wire basket BSK (Ø 200 x 90 mm) white

Casambi-enabled occupancy detector

DALI-2 interface for controlling digital dimmable ECGs in broadcast/multicast mode

Integrated temperature monitoring and short-circuit detection

Version as single-master device, can be networked wirelessly

DALI output power can be increased with accessories

Bright LED indication for commissioning

Mixed light measurement with internal and external light sensor

Weighting between internal and external light sensor can be adapted to suit the application

Adjustment of the reflection factor and input of the luminosity for the display of the actual luminosity in the app

Extension of the detection area with additional B.E.G. Casambi devices possible

Individual adaption of detection sensitivity for each PIR sensor

Detection area can be restricted with blinds

Functions adjustable via Casambi app

Including pre-assembled spring clamp with strain relief and contact protection cap for recessed ceiling mounting

Accessory for surface mounting available

Accessories for wall mounting optionally available

Further accessories for colour matching optionally available

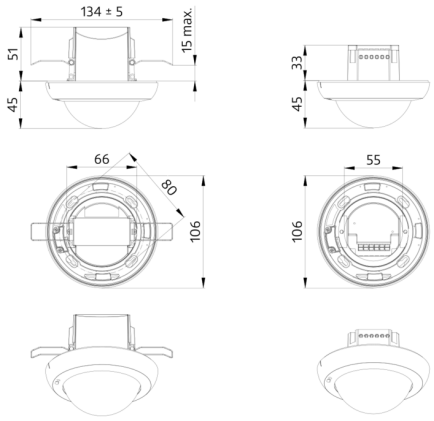

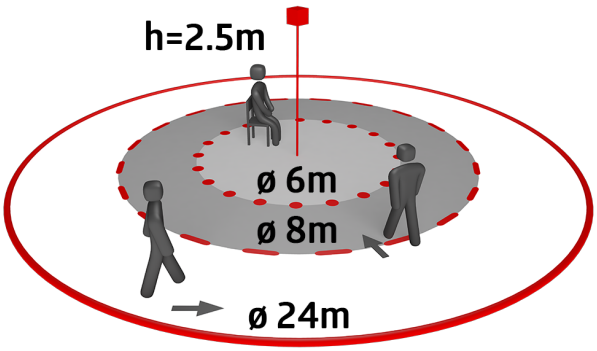

CASAMBI

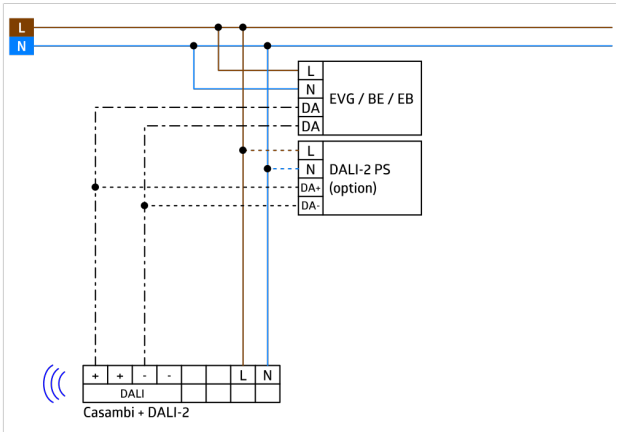
L
N
L
N
DA
DA
EVG / BE / EB
L
N
DA+
DA-
DALI-2 PS
(option)
+
+
-
-
L
N
DALI
Casambi + DALI-2

Set items

To receive the bundle according to the technical specification, please order the items listed.



PD4N-CAS DALI-2
Art.No: 93473

Voltage: 230 V AC ±10% 50 Hz
Dimensions: Ø 106 x 95 mm
Settings: Casambi App



SM socle mounting set IP54 PD4N H
Art.No: 93787

Dimensions: Ø 110 x 45 mm
Degree / class of protection: IP54
Material color: traffic white, similar to RAL9016

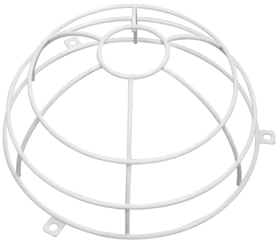

Wire basket BSK (Ø 200 x 90 mm)
Art.No: 92199

Dimensions: Ø 200 x 90 mm
Impact strength: IK09
Housing: coated steel basket