B.E.G. LUXOMAT® net



PD4N-BMS DALI-2 Set 93546-93751-93731

DALI-2 (BMS) PIR motion detector with 360° coverage and a range of up to Ø24m (450 m²), DALI-2 input device

Order data

Designation	Colour	Art.No
PD4N-BMS DALI-2	white	93546
SM socle mounting set IP54 PD2N- / PD4N-FM	anthracite	93751
lens PD4N, Cover ring	anthracite	93731

Technical data

Voltage:	via DALI Bus, max. 22.5 V DC
Dimensions:	**Ø 106 x 68 mm + Ø 109 x 19 mm (93751)**
Settings:	via DALI-Bus and application which supports DALI multisensors according to IEC62386, parts 101, 103, 303 and 304
Typ. power input:	7 mA
Settling time:	200 ms
Detection area:	horizontal 360° (Ceiling mounting)
Range:	max. Ø 24 m across max. Ø 8 m towards max. Ø 6.4 m seated
Monitored area (tangential movement):	450 m² / 2.5 m mounting height
Mounting height min./max./recommended:	2 m / 10 m / 2.5 m
Degree / class of protection:	**IP20 / Class II + IP54 (93751)**
Impact strength:	IK04
Measured light output:	0 - 4095 Lux, Mixed light measuring
Ambient temperature:	-25 °C to +55 °C
Housing:	polycarbonate, UV-resistant
Material color:	**anthracite mat, similar to RAL7016 (93731)**

Product information

Set : PD4N-BMS DALI-2 + SM socle mounting set IP54 PD2N- / PD4N-FM anthracite mat, similar to RAL7016 + lens PD4N, Cover ring anthracite mat, similar to RAL7016

Long-range DALI-2 multisensor (input device)

DALI-2 certified product

Powered via DALI bus

Bright LED indication for commissioning

DALI multimaster technology according to IEC 62386 part 103

Instance 0 provides information regarding occupancy and movement for the DALI-Bus according to IEC 62386 part 303

Instance 1 provides LUX values for the DALI-Bus according to IEC 62386 part 304

Parameterisation is possible via mandatory Multimaster-Application-Controller of any manufacturer. This controller must support IEC 62386 parts 101/103/303/304.

Mixed light measurement with internal and external light sensor

Suitable for mounting in false ceilings and flush-mounting

Accessory for surface mounting available

Detection area can be restricted with blinds

Individual adaption of detection sensitivity for each PIR sensor

Status LEDs can be activated / deactivated

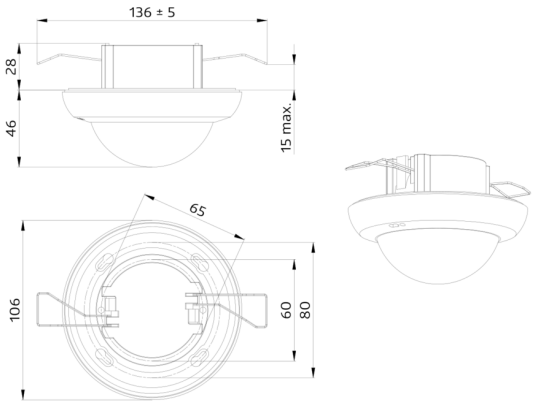
136 ± 5
28
46
15 max.
65
106
60
80

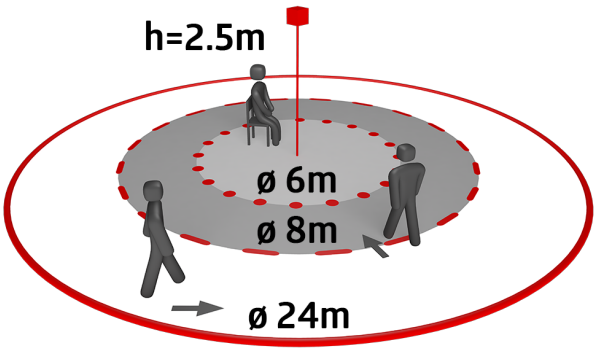
h=2.5m
ø 6m
ø 8m
ø 24m

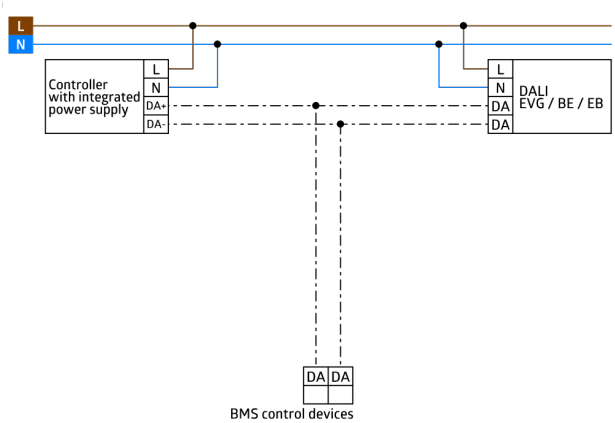
L
N
Controller
with integrated
power supply
L
N
DA+
DA-
L
N
DA
DA
DALI
EVG / BE / EB
DA
DA
BMS control devices

Set items

To receive the bundle according to the technical specification, please order the items listed.



PD4N-BMS DALI-2
Art.No: 93546

Voltage: via DALI Bus, max. 22.5 V DC
Dimensions: Ø 106 x 68 mm
Settings: via DALI-Bus and application which supports DALI multisensors according to IEC62386, parts 101, 103, 303 and 304



SM socle mounting set IP54 PD2N- / PD4N-FM
Art.No: 93751

Dimensions: Ø 109 x 19 mm
Degree / class of protection: IP54
Housing: polycarbonate, UV-resistant



lens PD4N, Cover ring
Art.No: 93731

Detection area: horizontal 360° (Ceiling mounting)
Range: max. Ø 24 m across
max. Ø 8 m towards
max. Ø 6.4 m seated
Monitored area (tangential movement): 450 m² / 2.5 m mounting height