B.E.G. LUXOMAT®




# PD4N-1C-FC Set
# 92149-92199-93736

230V PIR motion detector with 360° detection and a range of up to Ø24m (450 m²), remote-controlled

## Order data

| Designation | Colour | Art.No |
|---|---|---|
| PD4N-1C-FC | white | 92149 |
| Wire basket BSK (Ø 200 x 90 mm) | white | 92199 |
| lens PD4N-1C, Cover ring | anthracite | 93736 |

## Areas of application

- entrance halls
- corridors/hallways
- toilets
- equipment rooms

## Technical data

| | |
|---|---|
| Voltage: | 110 – 240 V AC 50 / 60 Hz |
| Dimensions: | **Ø 200 x 90 mm (92199)** |
| Power consumption: | approx. 0.5 W |
| Detection area: | horizontal 360° (Ceiling mounting) |
| Range: | max. Ø 24 m across<br>max. Ø 8 m towards<br>max. Ø 6.4 m seated |
| Monitored area (tangential movement): | 450 m² / 2.5 m mounting height |
| Mounting height min./max./recommended: | 2 m / 5 m / 2.5 m |
| Degree / class of protection: | IP23 / Class II |
| Impact strength: | **IK09 (92199)** |
| Ambient temperature: | -25 °C to +50 °C |
| Housing: | **polycarbonate, UV-resistant + coated steel basket (92199)** |
| Material color: | **anthracite mat, similar to RAL7016 (93736)** |
| **Channel 1 (lighting control)** | |
| Switching power: | 2300 W, cos φ = 1<br>1150 VA, cos φ = 0.5<br>800 W LED<br>max. inrush current Ip (20 ms) = 165 A<br>max. inrush current Ip (200 µs) = 800 A |
| Type of contact (k): | 1x µ-contact, NO contact with tungsten pre-make contact |
| Follow-up time: | 15 sec – 30 min, Pulse |
| Switch-on threshold: | 10 – 2000 Lux |

## Product information

Set : PD4N-1C-FC + Wire basket BSK (Ø 200 x 90 mm) white + lens PD4N-1C, Cover ring anthracite mat, similar to RAL7016

Remote-control capable ceiling motion detector with large detection range

One channel for light switching

Zero crossing switching

Special optical system for detection of even the smallest movements

Uninterrupted parallel circuit detection of several detectors

Manual switching via push-button possible

Additional functions can be set up using the optional remote control.

Factory settings 10 min and 500 lux

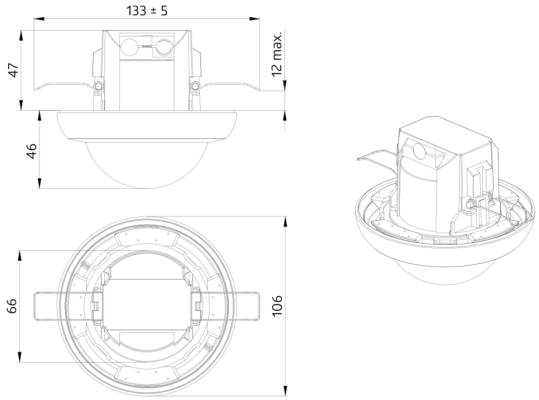
133 ± 5
47
12 max.
46
66
106

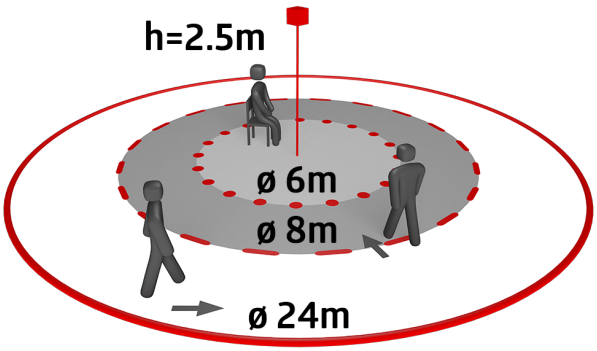
h=2.5m
ø 6m
ø 8m
ø 24m

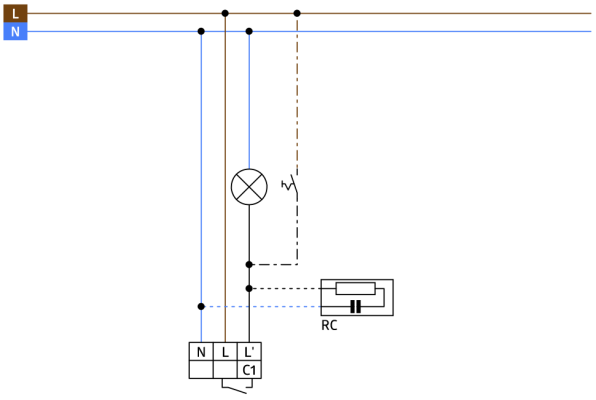
L
N
RC
N
L
L'
C1

## Set items

To receive the bundle according to the technical specification, please order the items listed.



**PD4N-1C-FC**
Art.No: 92149

Voltage: 110 – 240 V AC 50 / 60 Hz
Dimensions: Ø 106 x 90 mm
Power consumption: approx. 0.5 W

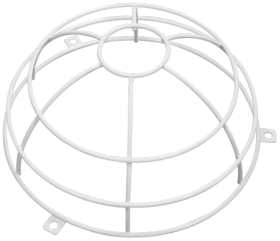

**Wire basket BSK (Ø 200 x 90 mm)**
Art.No: 92199

Dimensions: Ø 200 x 90 mm
Impact strength: IK09
Housing: coated steel basket



**lens PD4N-1C, Cover ring**
Art.No: 93736

Detection area: horizontal 360° (Ceiling mounting)
Range: max. Ø 24 m across
max. Ø 8 m towards
max. Ø 6.4 m seated
Monitored area (tangential movement): 450 m² / 2.5 m mounting height