B.E.G. LUXOMAT®



PD4-S-GH-SM Set
92265-92376-92199

Slave PIR motion detector with 360° coverage and a detection area of up to 30 x 19 m (440 m²) at a mounting height of 16 m, for high-bay warehouses

Order data

Designation	Colour	Art.No
PD4-S-GH-SM	white	92265
Surface mounting socket IP65 PD4-SM IP54	white	92376
Wire basket BSK (Ø 200 x 90 mm)	white	92199

Technical data

Voltage:	110 – 240 V AC 50 / 60 Hz
Dimensions:	**Ø 200 x 90 mm (92199)**
Power consumption:	approx. 0.2 W
Detection area:	horizontal 360° oval (Ceiling mounting)
Range:	30 m x 19 m
Monitored area (tangential movement):	440 m² / 14 m mounting height
Mounting height min./max./recommended:	5 m / 16 m / 14 m
Degree / class of protection:	IP54 / Class II
Impact strength:	**IK09 (92199)**
Ambient temperature:	-25 °C to +50 °C
Housing:	**polycarbonate, UV-resistant + coated steel basket (92199)**
Material color:	white mat, similar to RAL9010
Pulse interval:	2 or 9 sec

Product information

Set : PD4-S-GH-SM + Surface mounting socket IP65 PD4-SM IP54 white + Wire basket BSK (Ø 200 x 90 mm) white

Slave device for high-bay applications

For extending the detection area of a Master device

Trigger pulse to master device upon detected movement independent of the ambient light level

Compatible with 230 V devices. Concerning exceptions please see the respective master device.

For further information
https://www.beg-luxomat.com/en-au/solutions/areas-of-application/great-mounting-heights/

There are markings to ensure correct alignment during installation

When used in high-bay warehouses, care should be taken that, in the cross-aisles of the warehouse, detectors are installed that can detect movement only in the desired aisle locations, by using blinds or other technical arrangements.

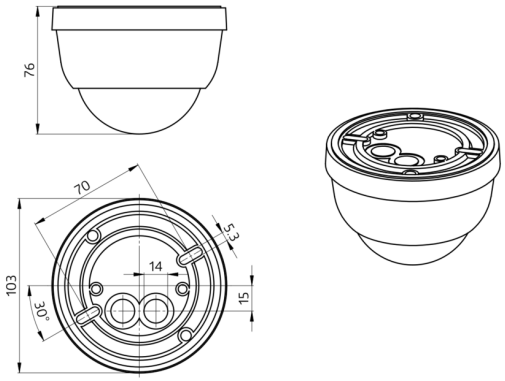
76
70
5.3
14
103
30°
15

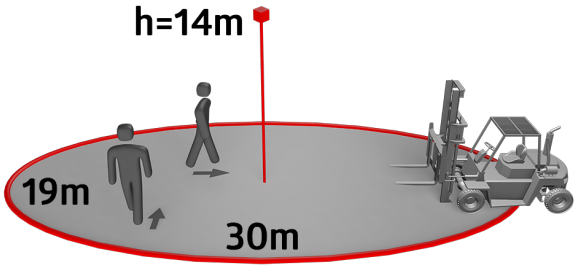
h=14m
19m
30m

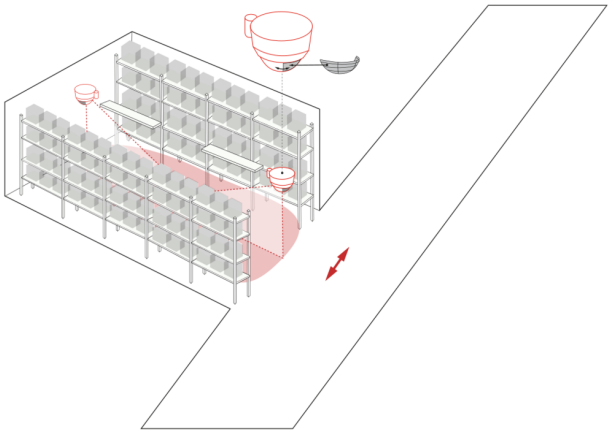

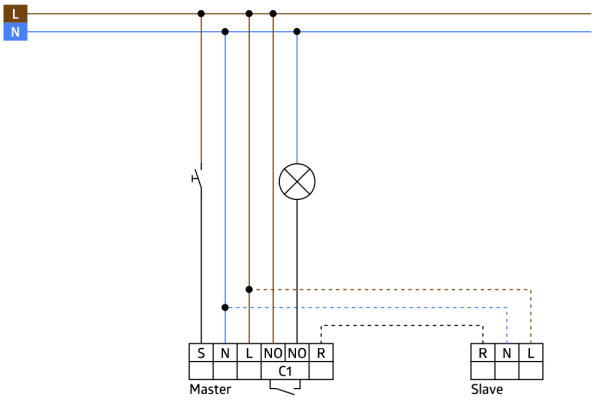
L
N
S
N
L
NO
NO
R
C1
Master
R
N
L
Slave

Set items

To receive the bundle according to the technical specification, please order the items listed.



PD4-S-GH-SM
Art.No: 92265

Voltage: 110 – 240 V AC 50 / 60 Hz
Dimensions: Ø 101 x 76 mm
Power consumption: approx. 0.2 W



Surface mounting socket IP65 PD4-SM IP54
Art.No: 92376

Dimensions: Ø 115 x 70 mm
Degree / class of protection: IP65
Impact strength: IK07

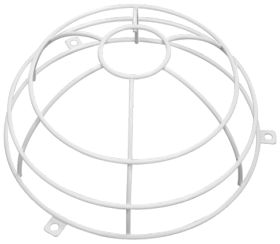

Wire basket BSK (Ø 200 x 90 mm)
Art.No: 92199

Dimensions: Ø 200 x 90 mm
Impact strength: IK09
Housing: coated steel basket