B.E.G. LUXOMAT®



PD4-M-TRIO-C-3P-SM Set 92747-92199

230V PIR motion detector with 360° coverage and a detection area of up to 40x5m (250 m²), suitable for hallways, remote-controlled, and compatible with emergency power systems

Order data

Designation	Colour	Art.No
PD4-M-TRIO-C-3P-SM	white	92747
Wire basket BSK (Ø 200 x 90 mm)	white	92199

Technical data

Voltage:	110 – 240 V AC 50 / 60 Hz
Dimensions:	**Ø 200 x 90 mm (92199)**
Power consumption:	approx. 0.5 W
Detection area:	horizontal 360° (Ceiling mounting)
Range:	max. Ø 40 m across max. Ø 20 m towards
Monitored area (tangential movement):	250 m² / 2.5 m mounting height
Mounting height min./max./recommended:	2.4 m / 2.6 m / 2.5 m
Degree / class of protection:	IP20 / Class II
Impact strength:	**IK09 (92199)**
Ambient temperature:	-25 °C to +50 °C
Housing:	**polycarbonate, UV-resistant + coated steel basket (92199)**
Material color:	white mat, similar to RAL9010
Channel 1 (lighting control, potential-free (dry))	
Switching power:	2300 W, cos φ = 1 1150 VA, cos φ = 0.5 300 W LED
Type of contact (k):	2x µ-contact, dry Contact NC with tungsten pre-make contact
Follow-up time:	15 sec – 30 min, Pulse
Switch-on threshold:	10 – 2000 Lux
Light measuring:	Mixed light measuring

Product information

Set : PD4-M-TRIO-C-3P-SM + Wire basket BSK (Ø 200 x 90 mm) white

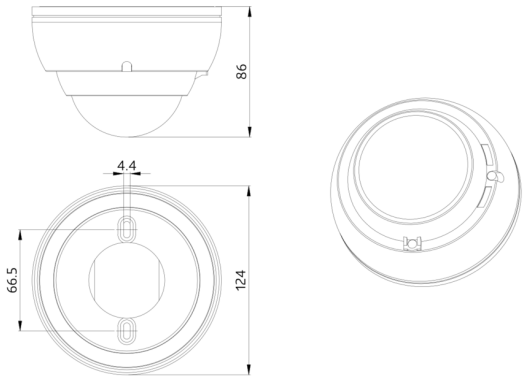
86
4.4
66.5
124

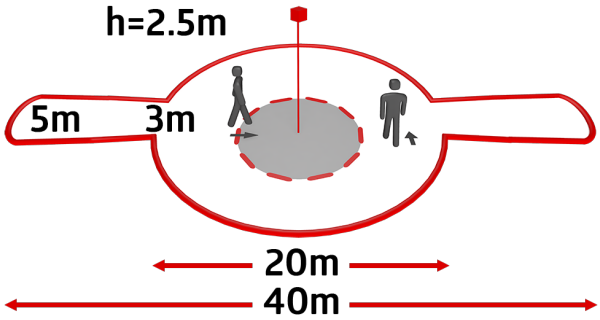
h=2.5m
5m
3m
20m
40m

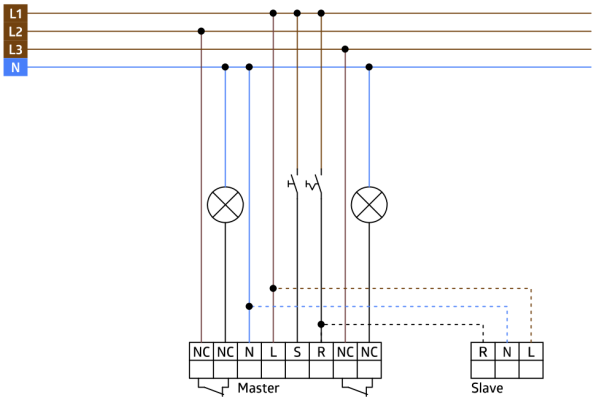
L1
L2
L3
N
NC
NC
N
L
S
R
NC
NC
Master
R
N
L
Slave

Set items

To receive the bundle according to the technical specification, please order the items listed.



PD4-M-TRIO-C-3P-SM
Art.No: 92747

Voltage: 110 – 240 V AC 50 / 60 Hz
Dimensions: Ø 125 x 85 mm
Power consumption: approx. 0.5 W

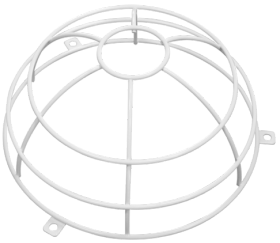

Wire basket BSK (Ø 200 x 90 mm)
Art.No: 92199

Dimensions: Ø 200 x 90 mm
Impact strength: IK09
Housing: coated steel basket