

PD4-M-TRIO-C-3P-FC Set 92746-92199

230V PIR motion detector with 360° coverage and a detection area of up to 40x5m (250 m²), suitable for hallways, remote-controlled, and compatible with emergency power systems

Order data

Designation	Colour	Art.No
PD4-M-TRIO-C-3P-FC	white	92746
Wire basket BSK (Ø 200 x 90 mm)	white	92199

Areas of application

- corridors/hallways

Technical data

Voltage:	110 – 240 V AC 50 / 60 Hz
Dimensions:	**Ø 200 x 90 mm (92199)**
Power consumption:	approx. 0.5 W
Detection area:	horizontal 360° (Ceiling mounting)
Range:	max. Ø 40 m across max. Ø 20 m towards
Monitored area (tangential movement):	250 m² / 2.5 m mounting height
Mounting height min./max./recommended:	2.4 m / 2.6 m / 2.5 m
Degree / class of protection:	IP20 / Class II
Impact strength:	**IK09 (92199)**
Ambient temperature:	-25 °C to +50 °C
Housing:	**polycarbonate, UV-resistant + coated steel basket (92199)**
Material color:	white mat, similar to RAL9010
Channel 1 (lighting control, potential-free (dry))	
Switching power:	2300 W, cos φ = 1 1150 VA, cos φ = 0.5 300 W LED
Type of contact (k):	2x µ-contact, dry Contact NC with tungsten pre-make contact
Follow-up time:	15 sec – 30 min, Pulse
Switch-on threshold:	10 – 2000 Lux
Light measuring:	Mixed light measuring

Product information

Set : PD4-M-TRIO-C-3P-FC + Wire basket BSK (Ø 200 x 90 mm) white

1-channel occupancy detector with two simultaneously operating relay outputs, which enable distribution to different phases

The switching channel with the two relay outputs closes when the operating voltage of the detector fails, so the lighting remains on as long as the two phases of the luminaires are supplied with power.

The device requires an operating voltage. The third phase can be used for this purpose.

Designed for corridors

Version as master device

Detection area can be extended by using slave devices

Manual switching via push-button possible

Additional functions can be set up using the optional remote control.

There are markings to ensure correct alignment during installation

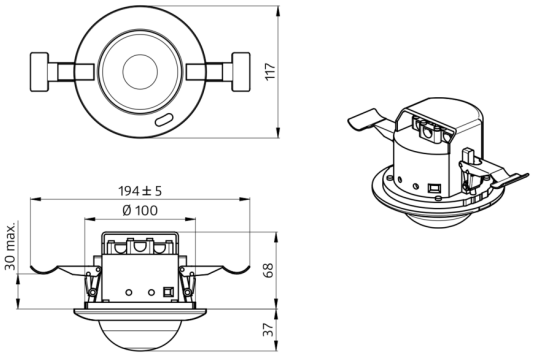

92746 PD4-M-TRIO-K-3P-DE

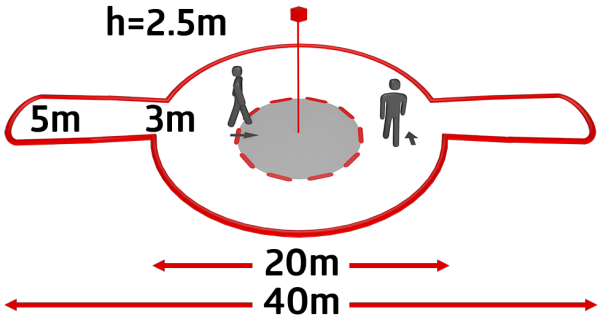

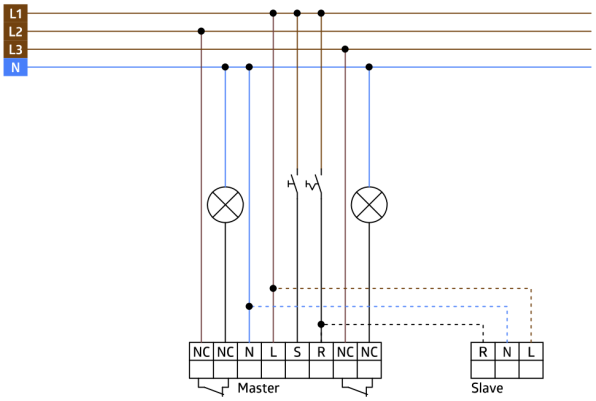

Set items

To receive the bundle according to the technical specification, please order the items listed.



PD4-M-TRIO-C-3P-FC
Art.No: 92746

Voltage: 110 – 240 V AC 50 / 60 Hz
Dimensions: Ø 117 x 100 mm
Power consumption: approx. 0.5 W

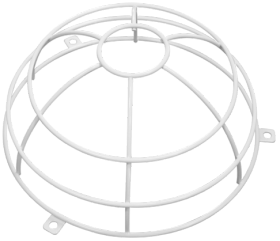

Wire basket BSK (Ø 200 x 90 mm)
Art.No: 92199

Dimensions: Ø 200 x 90 mm
Impact strength: IK09
Housing: coated steel basket