B.E.G. LUXOMAT®



PD4-M-TRIO-2DALI/DSI-1C-SM Set 92751-92467-92386

Occupancy detector for two separate lighting groups, for daylight-dependent lighting control

One potential-free switching channel for control of equipment (HVAC) or lighting

Two independent, movable light sensors

Order data

Designation	Colour	Art.No
PD4-M-TRIO-2DALI/DSI-1C-SM	white	92751
Wire basket BSK (Ø 164 x 143 mm)	white	92467
Socket IP54 PD4-TRIO-SM	white	92386

Areas of application

- open-plan offices
- conference rooms
- classrooms/seminar rooms

Technical data

Voltage:	110 – 240 V AC 50 / 60 Hz
Dimensions:	**Ø 164 x 143 mm (92467)**
Power consumption:	approx. 2 W
Detection area:	horizontal 360° (Ceiling mounting)
Range:	max. Ø 24 m across max. Ø 8 m towards max. Ø 6.4 m seated
Monitored area (tangential movement):	450 m² / 2.5 m mounting height
Mounting height min./max./recommended:	2 m / 10 m / 2.5 m
Degree / class of protection:	**IP54 (92386)**
Impact strength:	**IK09 (92467)**
Ambient temperature:	-25 °C to +50 °C
Housing:	**polycarbonate, UV-resistant + coated steel basket (92467)**
Material color:	white mat, similar to RAL9010
Channel 1 and Channel 2 (lighting control)	
DALI output:	up to 25 DALI / DSI-EB per channel
Orientation light:	10 – 30 % / OFF / 1 min – 60 min / ∞
Channel 3 (HVAC control or lighting control, potential-free (dry))	
Switching power:	3000 W, cos φ = 1 1500 VA, cos φ = 0.5 800 W LED max. inrush current Ip (20ms) = 165 A, (200 µs) = 800 A
Type of contact:	1x µ-contact, dry NO contact with tungsten pre-make contact
Channel 1 to channel 3	
Follow-up time:	1 min – 60 min
Brightness set value:	10 – 2000 Lux
Light measuring:	Mixed light measuring

Product information

Set : PD4-M-TRIO-2DALI/DSI-1C-SM + Wire basket BSK (Ø 164 x 143 mm) white + Socket IP54 PD4-TRIO-SM white

Occupancy detector for two separate lighting groups, for daylight-dependent lighting control

One potential-free switching channel for control of equipment (HVAC) or lighting

Two independent, movable light sensors

One common detection area

2 DALI/DSI interfaces for control of digital dimmable electronic ballasts as a group

Switching between DALI and DSI possible with remote control

Orientation light function

Relay with tungsten pre-make contact, optimised for LED loads

Version as master device

Detection area can be extended by using slave devices

Manual switching and dimming via push button possible

Semi-automatic, full-automatic or twilight switch mode

Additional functions can be set up using the optional remote control.

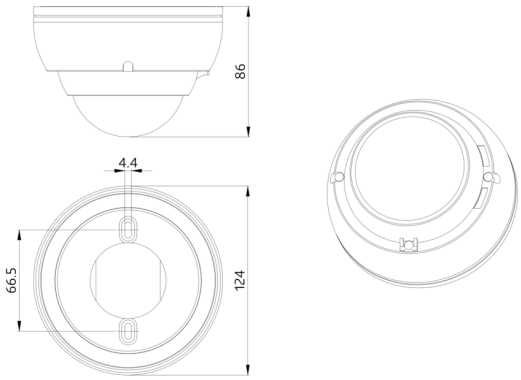
86
4.4
66.5
124

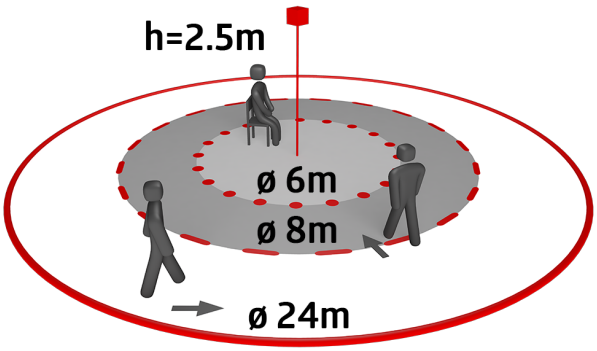
h=2.5m
ø 6m
ø 8m
ø 24m

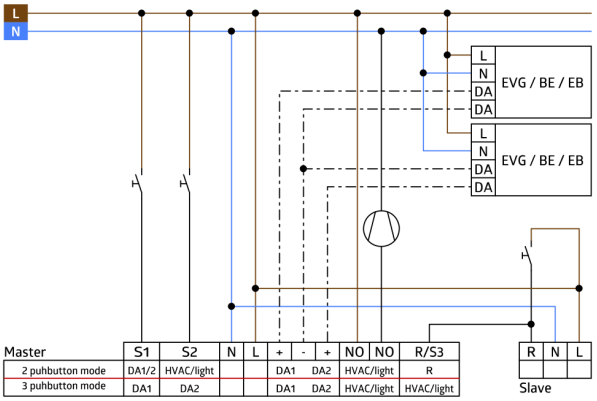
L
N
L
N
DA
DA
EVG / BE / EB
L
N
DA
DA
EVG / BE / EB
Master
S1
S2
N
L
+
-
+
NO
NO
R/S3
2 puhbutton mode
DA1/2
HVAC/light
DA1
DA2
HVAC/light
R
3 puhbutton mode
DA1
DA2
DA1
DA2
HVAC/light
HVAC/light
R
N
L
Slave

Set items

To receive the bundle according to the technical specification, please order the items listed.



PD4-M-TRIO-2DALI/DSI-1C-SM
Art.No: 92751

Voltage: 110 – 240 V AC 50 / 60 Hz
Dimensions: Ø 124 x 85 mm
Power consumption: approx. 2 W



Wire basket BSK (Ø 164 x 143 mm)
Art.No: 92467

Dimensions: Ø 164 x 143 mm
Impact strength: IK09
Housing: coated steel basket



Socket IP54 PD4-TRIO-SM
Art.No: 92386

Degree / class of protection: IP54
Housing: polycarbonate, UV-resistant
Material color: white