B.E.G. LUXOMAT®



PD4-M-TRIO-2DALI/DSI-1C-SM

92751 EAN: 4007529927517

Occupancy detector for two separate lighting groups, for daylight-dependent lighting control

One potential-free switching channel for control of equipment (HVAC) or lighting

Two independent, movable light sensors

Order data

Designation	Colour	Art.No
PD4-M-TRIO-2DALI/DSI-1C-SM	white	92751

Accessories

Designation	Colour	Art.No
RC-Arc extinction kit	white	10880
Mini-RC-Arc extinction kit		10882
BLE-IR-Adapter	black	93067
IR-PD4-TRIO-DALI	-	92104
Wire basket BSK (Ø 200 x 90 mm)	white	92199
Wire basket BSK (Ø 164 x 143 mm)	white	92467
Socket IP54 PD4-TRIO-SM	white	92386
Pendulum mounting set PD2/3/4 SM	jet black	93193
Pendulum mounting set PD2/3/4 SM	white	93179

Areas of application

- open-plan offices
- conference rooms
- classrooms/seminar rooms

Technical data

Voltage:	110 – 240 V AC 50 / 60 Hz
Dimensions:	Ø 124 x 85 mm
Power consumption:	approx. 2 W
Detection area:	horizontal 360° (Ceiling mounting)
Range:	max. Ø 24 m across max. Ø 8 m towards max. Ø 6.4 m seated
Monitored area (tangential movement):	450 m² / 2.5 m mounting height
Mounting height min./max./recommended:	2 m / 10 m / 2.5 m
Degree / class of protection:	IP20 / Class II
Impact strength:	IK04
Ambient temperature:	-25 °C to +50 °C
Housing:	polycarbonate, UV-resistant
Material color:	white mat, similar to RAL9010
Channel 1 and Channel 2 (lighting control)	
DALI output:	up to 25 DALI / DSI-EB per channel
Orientation light:	10 – 30 % / OFF / 1 min – 60 min / ∞
Channel 3 (HVAC control or lighting control, potential-free (dry))	
Switching power:	3000 W, cos φ = 1 1500 VA, cos φ = 0.5 800 W LED max. inrush current Ip (20ms) = 165 A, (200 µs) = 800 A
Type of contact:	1x µ-contact, dry NO contact with tungsten pre-make contact
Channel 1 to channel 3	
Follow-up time:	1 min – 60 min
Brightness set value:	10 – 2000 Lux
Light measuring:	Mixed light measuring

Product information

Occupancy detector for two separate lighting groups, for daylight-dependent lighting control

One potential-free switching channel for control of equipment (HVAC) or lighting

Two independent, movable light sensors

One common detection area

2 DALI/DSI interfaces for control of digital dimmable electronic ballasts as a group

Switching between DALI and DSI possible with remote control

Orientation light function

Relay with tungsten pre-make contact, optimised for LED loads

Version as master device

Detection area can be extended by using slave devices

Manual switching and dimming via push button possible

Semi-automatic, full-automatic or twilight switch mode

Additional functions can be set up using the optional remote control.

Application examples:
open-plan offices, conference rooms, classrooms/seminar rooms

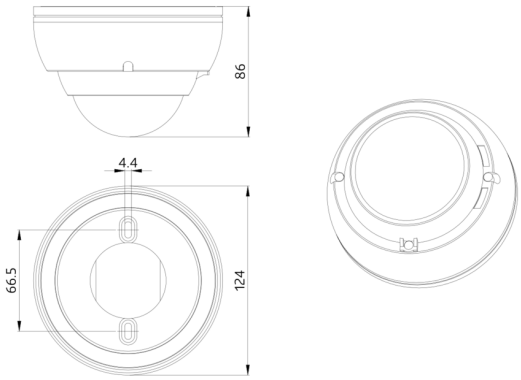
86
4.4
66.5
124

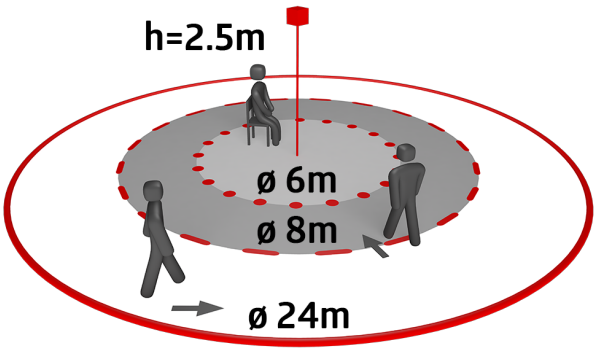
h=2.5m
ø 6m
ø 8m
ø 24m

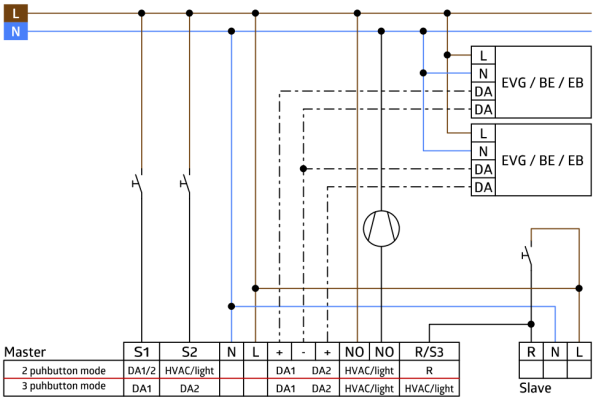
L
N
L
N
DA
DA
EVG / BE / EB
L
N
DA
DA
EVG / BE / EB
Master
S1
S2
N
L
+
-
+
NO
NO
R/S3
2 puhbutton mode
DA1/2
HVAC/light
DA1
DA2
HVAC/light
R
3 puhbutton mode
DA1
DA2
DA1
DA2
HVAC/light
HVAC/light
R
N
L
Slave

Accessories



RC-Arc extinction kit
Art.No: 10880

Voltage: 230 V AC ±10%
Dimensions: 38 x 12 x 26 mm
Degree / class of protection: IP20 / Class II



Mini-RC-Arc extinction kit
Art.No: 10882

Voltage: 230 V AC ±10%
Dimensions: 50 x 23 x 8 mm
Degree / class of protection: IP20 / Class II



BLE-IR-Adapter
Art.No: 93067

Dimensions: 40 x 55 x 103 mm
Material color: black
Frequency: 2.4 GHz ISM band, GFSK
0.2 dBm + 5.3 dBi = 5.5 dBm



IR-PD4-TRIO-DALI
Art.No: 92104

Battery: 3.0 V Lithium CR2032 (inclusive)
Dimensions: 80 x 60 x 8 mm
Material color: -

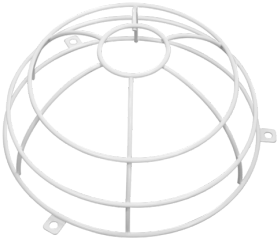

Wire basket BSK (Ø 200 x 90 mm)
Art.No: 92199

Dimensions: Ø 200 x 90 mm
Impact strength: IK09
Housing: coated steel basket



Wire basket BSK (Ø 164 x 143 mm)
Art.No: 92467

Dimensions: Ø 164 x 143 mm
Impact strength: IK09
Housing: coated steel basket



Socket IP54 PD4-TRIO-SM
Art.No: 92386

Degree / class of protection: IP54
Housing: polycarbonate, UV-resistant
Material color: white



Pendulum mounting set PD2/3/4 SM
Art.No: 93193

Dimensions: 1 : Ø 113 x 79 mm, 2 : Ø 113 x 34 mm
Housing: polycarbonate, UV-resistant
Material color: jet black, similar to RAL9005



Pendulum mounting set PD2/3/4 SM
Art.No: 93179

Dimensions: 1 : Ø 113 x 79 mm, 2 : Ø 113 x 34 mm
Housing: polycarbonate, UV-resistant
Material color: white, similar to RAL9010