B.E.G. LUXOMAT®



PD4-M-HCL2-SM DALI-2 Set 93485-92467

DALI-2 HCL PIR motion detector with integrated DALI application controller, 360° detection, and a range of up to Ø24m (450 m²), Multimaster, with switching relay

Order data

Designation	Colour	Art.No
PD4-M-HCL2-SM DALI-2	white	93485
Wire basket BSK (Ø 164 x 143 mm)	white	92467

Technical data

Voltage:	230 V AC ±10% 50 Hz
Dimensions:	**Ø 164 x 143 mm (92467)**
Power consumption:	approx. 2 W
Detection area:	horizontal 360° (Ceiling mounting)
Range:	max. Ø 24 m across max. Ø 8 m towards max. Ø 6.4 m seated
Monitored area (tangential movement):	450 m² / 2.5 m mounting height
Mounting height min./max./recommended:	2 m / 10 m / 2.5 m
Degree / class of protection:	IP20 / Class II
Impact strength:	**IK09 (92467)**
Ambient temperature:	-25 °C to +50 °C
Housing:	**polycarbonate, UV-resistant + coated steel basket (92467)**
Material color:	white, similar to RAL9010
DALI Control	
DALI output:	100 mA (guaranteed), 120 mA (max.)
Supported control gear:	DT5, DT6, DT7, DT8-Tc (HCL only possible with DT8-Tc, 2700 - 6500 K)
Supported control devices:	B.E.G. BMS (motion detection)
Follow-up time:	1 min – 150 min
Orientation light:	5 – 100 % / OFF / 1 min – 255 min / ∞
Brightness set value:	10 – 2500 Lux
Relay (dry NO)	
Switching power:	2300 W, cos φ = 1 1150 VA, cos φ = 0.5 800 W LED max. inrush current Ip (20 ms) = 165 A, Ip (200 µs) = 800 A
Type of contact:	1x µ-contact, NO contact
Follow-up time:	5 sec – 120 min (HVAC)

Product information

Set : PD4-M-HCL2-SM DALI-2 + Wire basket BSK (Ø 164 x 143 mm) white

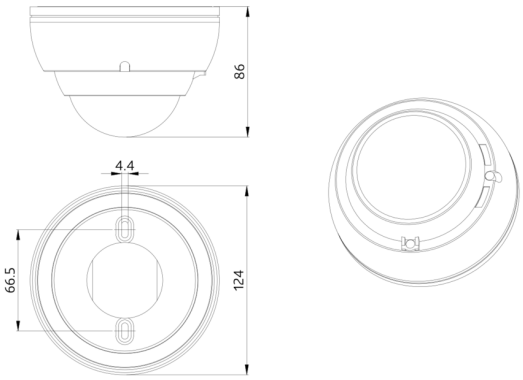
86
4.4
66.5
124

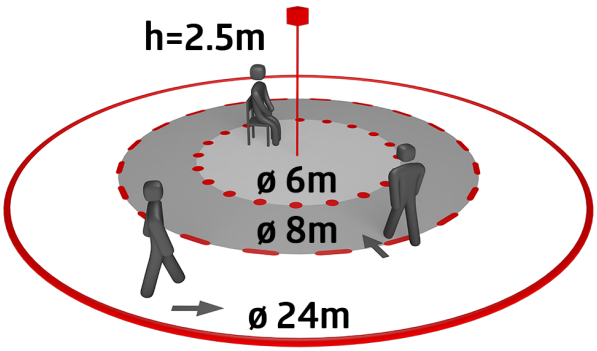
h=2.5m
ø 6m
ø 8m
ø 24m

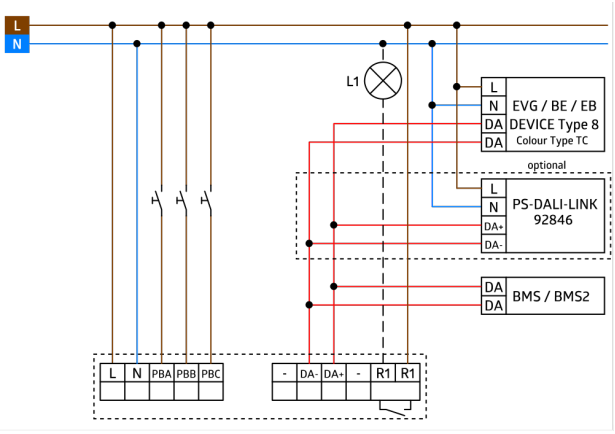
L
N
L1
L
N
DA
DA
EVG / BE / EB
DEVICE Type 8
Colour Type TC
optional
L
N
DA+
DA-
PS-DALI-LINK
92846
DA
DA
BMS / BMS2
L
N
PBA
PBB
PBC
-
DA-
DA+
-
R1
R1

Set items

To receive the bundle according to the technical specification, please order the items listed.



PD4-M-HCL2-SM DALI-2
Art.No: 93485

Voltage: 230 V AC ±10% 50 Hz
Dimensions: Ø 124 x 85 mm
Power consumption: approx. 2 W



Wire basket BSK (Ø 164 x 143 mm)
Art.No: 92467

Dimensions: Ø 164 x 143 mm
Impact strength: IK09
Housing: coated steel basket